U Clamp RUC I HCP

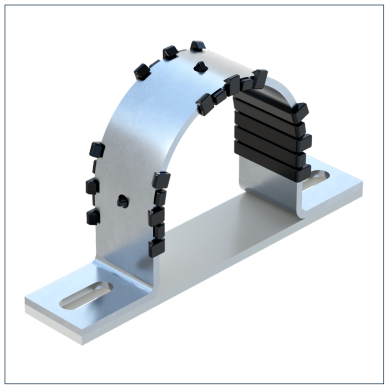

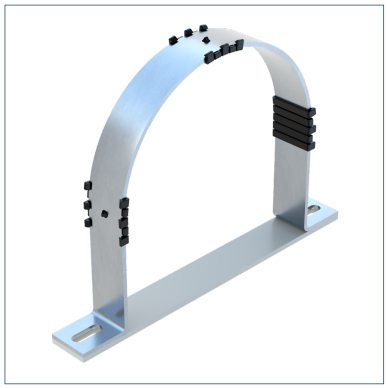

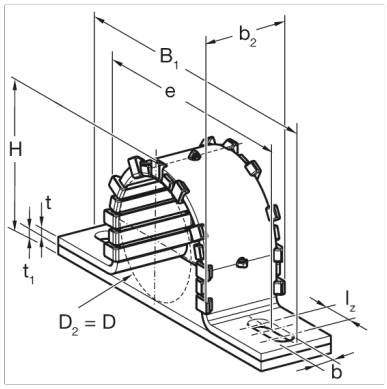

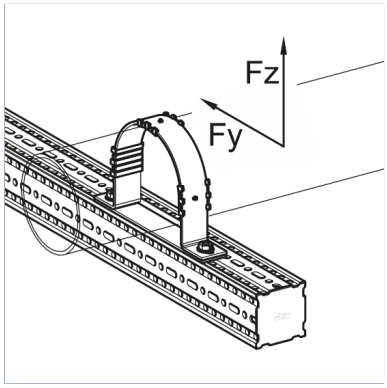

General Information

Guided Support for the installation of siFramo Beam Sections, Channels 41 and steel girders (H-, I- and Double-U) to support overlying pipelines. This U Clamp can be used as an alternative for Non-Grip (Guide) U Bolt applications. The sliding plate reduces friction between pipe and substructure. The plastic layer and the sliding plate ensure a galvanic isolation between pipe and U Clamp as well as substructure, so it's possible to fasten e.g. stainless steel pipes.

Installation

Depending on the existing substructure the following options are possible:

a) On top of siFramo Beam Sections with Self Forming Screws FLS
b) On top of Channels 41 with bolts M10 and suitable Channel Nut
c) On top of steel girders (H-, I- and Double-U) with bolts M10

Temperature

Max. temperature	90 °C
Min. temperature	-20 °C

Material Properties

Halogen-free	0
UV-resistant	0

Material

Primary element material	steel
Sliding element material	PA 6.0 POM
Surface finish	HCP
Corrosion protection class	C4

Forces

Type	-V{Y,perm.}	V{Y,perm.}	-V{Z,perm.}	V{Z,perm.}
RUC-I MP 22 HCP	0.60 kN	0.60 kN	2.30 kN	2.30 kN
RUC-I MP 28 HCP	0.60 kN	0.60 kN	2.30 kN	2.30 kN
RUC-I MP 35 HCP	0.60 kN	0.60 kN	2.30 kN	2.30 kN
RUC-I MP 43 HCP	0.60 kN	0.60 kN	2.30 kN	2.30 kN
RUC-I MP 49 HCP	0.60 kN	0.60 kN	2.30 kN	2.30 kN
RUC-I MP 62 HCP	0.60 kN	0.60 kN	2.30 kN	2.30 kN
RUC-I MP 77 HCP	0.60 kN	0.60 kN	2.30 kN	2.30 kN
RUC-I MP 90 HCP	0.60 kN	0.60 kN	2.30 kN	2.30 kN
RUC-I MP 116 HCP	0.60 kN	0.60 kN	2.30 kN	2.30 kN

U Clamp RUC I HCP

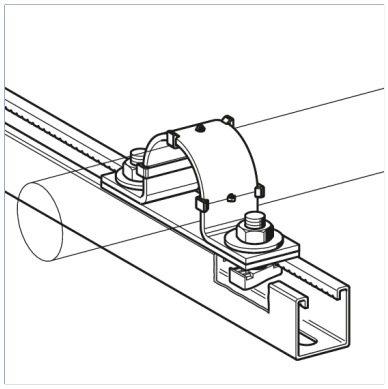

Type	-V{Y,perm.}	V{Y,perm.}	-V{Z,perm.}	V{Z,perm.}
RUC-I MP 141 HCP	0.20 kN	0.20 kN	0.80 kN	0.80 kN
RUC-I MP 170 HCP	0.20 kN	0.20 kN	0.80 kN	0.80 kN
RUC-I MP 221 HCP	0.20 kN	0.20 kN	0.80 kN	0.80 kN
RUC-I MP 275 HCP	0.20 kN	0.20 kN	0.80 kN	0.80 kN
RUC-I MP 325 HCP	0.20 kN	0.20 kN	0.80 kN	0.80 kN

Note on loadings

The perm. loads have been determined by load tests following DIN EN 13480-3 annex J. For the installation on top of steel girders and Channels 41 the load capacities of these substructures (and connection parts) have to be verified.

Additional information

Also available with DualShield for high corrosion protection within C5H environments.

Types

Type	DN	Weight	Quantity	Part number
RUC-I MP 22 HCP	DN 15 (1/2")	0.220 kg/pcs.	25 pcs.	805068
RUC-I MP 28 HCP	DN 20 (3/4")	0.230 kg/pcs.	25 pcs.	805069
RUC-I MP 35 HCP	DN 25 (1")	0.260 kg/pcs.	25 pcs.	805070
RUC-I MP 43 HCP	DN 32 (1 1/4")	0.290 kg/pcs.	25 pcs.	805071
RUC-I MP 49 HCP	DN 40 (1 1/2")	0.300 kg/pcs.	25 pcs.	805072
RUC-I MP 62 HCP	DN 50 (2")	0.350 kg/pcs.	25 pcs.	805073
RUC-I MP 77 HCP	DN 65 (2 1/2")	0.420 kg/pcs.	25 pcs.	805074
RUC-I MP 90 HCP	DN 80 (3")	0.460 kg/pcs.	25 pcs.	805075
RUC-I MP 116 HCP	DN 100 (4")	0.550 kg/pcs.	25 pcs.	805076
RUC-I MP 141 HCP	DN 125 (5")	0.650 kg/pcs.	10 pcs.	805077
RUC-I MP 170 HCP	DN 150 (6")	0.770 kg/pcs.	10 pcs.	805078
RUC-I MP 221 HCP	DN 200 (8")	0.930 kg/pcs.	10 pcs.	805079
RUC-I MP 275 HCP	DN 250 (10")	1.140 kg/pcs.	5 pcs.	805080
RUC-I MP 325 HCP	DN 300 (12")	1.350 kg/pcs.	1 pcs.	805081

Dimensions

Type	B1	b	b2	D	D2	e	H	Iz	t	t1
RUC-I MP 22 HCP	128 mm	11 mm	45.3 mm	24.7 mm	24.7 mm	85 mm	37.1 mm	20 mm	4 mm	5 mm
RUC-I MP 28 HCP	134 mm	11 mm	45.3 mm	30.7 mm	30.7 mm	91 mm	43.1 mm	20 mm	4 mm	5 mm
RUC-I MP 35 HCP	141 mm	11 mm	45.3 mm	37.7 mm	37.7 mm	98 mm	50.1 mm	20 mm	4 mm	5 mm

U Clamp RUC I HCP

Type	B1	b	b2	D	D2	e	H	lz	t	t1
RUC-I MP 43 HCP	149.5 mm	11 mm	45.3 mm	46.2 mm	46.2 mm	106.5 mm	58.6 mm	20 mm	4 mm	5 mm
RUC-I MP 49 HCP	155.5 mm	11 mm	45.3 mm	52.2 mm	52.2 mm	112.5 mm	64.6 mm	20 mm	4 mm	5 mm
RUC-I MP 62 HCP	168 mm	11 mm	45.3 mm	64.7 mm	64.7 mm	125 mm	77.1 mm	20 mm	4 mm	5 mm
RUC-I MP 77 HCP	183.5 mm	11 mm	45.3 mm	80.2 mm	80.2 mm	140.5 mm	92.6 mm	20 mm	4 mm	5 mm
RUC-I MP 90 HCP	196.5 mm	11 mm	45.3 mm	93.2 mm	93.2 mm	153.5 mm	105.6 mm	20 mm	4 mm	5 mm
RUC-I MP 116 HCP	222 mm	11 mm	45.3 mm	118.7 mm	118.7 mm	179 mm	131.1 mm	20 mm	4 mm	5 mm
RUC-I MP 141 HCP	247 mm	11 mm	45.3 mm	143.7 mm	143.7 mm	204 mm	156.1 mm	20 mm	4 mm	5 mm
RUC-I MP 170 HCP	276 mm	11 mm	45.3 mm	172.7 mm	172.7 mm	233 mm	185.1 mm	20 mm	4 mm	5 mm
RUC-I MP 221 HCP	327 mm	11 mm	45.3 mm	223.7 mm	223.7 mm	284 mm	236.1 mm	20 mm	4 mm	5 mm
RUC-I MP 275 HCP	381 mm	11 mm	45.3 mm	277.7 mm	277.7 mm	338 mm	290.1 mm	20 mm	4 mm	5 mm
RUC-I MP 325 HCP	431.5 mm	11 mm	45.3 mm	328.2 mm	328.2 mm	388.5 mm	340.6 mm	20 mm	4 mm	5 mm