Eye-Plate HP HCP



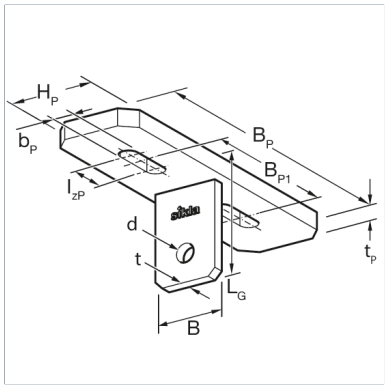

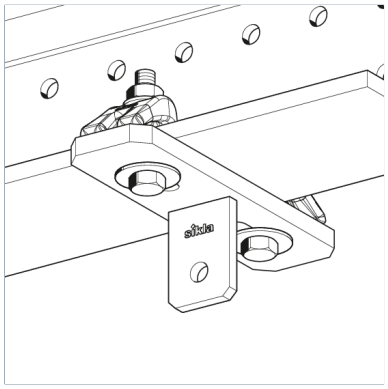

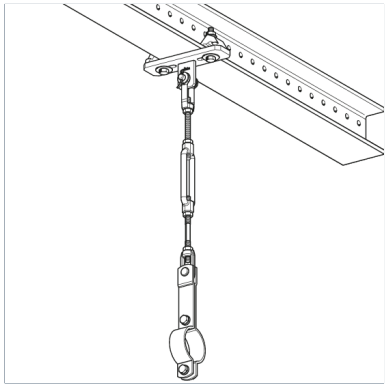

General Information

Connecting component for the direct attachment of rod hanger assemblies to beam sections with a flange width 80-99mm. The pre-welded Eye-Plate serves as a basic element for the connection of the Rod Hanger Load Chain Assembly LKV in sizes M10 up to M16 rod and Pipe Clamps type Stabil Form C LK.

Installation

The Beam System Eye-Plate HP 80/99 is clamped to the supporting steel beam section by means of Assembly Set MS 5P M12 S2. The Eye-Plate can also be fastened directly to concrete by means of 2no. M12 anchors.

Type A: Pipe runs across the steel beam
Type B: Pipe runs longitudinally to the steel beam

Material Properties

Halogen-free	0
UV-resistant	0

Material

Primary element material	steel
Surface finish	HCP
Corrosion protection class	C4

Forces

Type	-V{Z,perm.}
HP 80/99 - A M10 HCP	11.20 kN
HP 80/99 - A M12 HCP	12.10 kN
HP 80/99 - A M16 HCP	12.50 kN
HP 80/99 - B M10 HCP	11.20 kN
HP 80/99 - B M12 HCP	12.10 kN
HP 80/99 - B M16 HCP	12.50 kN

Note on loadings

The implementation and construction requirements of the components, their design as well as their verifications and load tests were carried out following the standards VGB R 510 L part I, KTA 3205.3 and DIN EN 13480-3.

Additional information

Note: Delivery date on request

Types

Type	Weight	Quantity	Part number
HP 80/99 - A M10 HCP	1.200 kg/pcs.	10 pcs.	113029

Eye-Plate HP HCP

Type	Weight	Quantity	Part number
HP 80/99 - A M12 HCP	1.540 kg/pcs.	10 pcs.	113030
HP 80/99 - A M16 HCP	1.206 kg/pcs.	10 pcs.	113031
HP 80/99 - B M10 HCP	1.340 kg/pcs.	10 pcs.	113026
HP 80/99 - B M12 HCP	1.340 kg/pcs.	10 pcs.	113027
HP 80/99 - B M16 HCP	1.206 kg/pcs.	10 pcs.	113028

Dimensions

Type	B	BP	BP1	bP	d	HP	lzP	LG	tP	t
HP 80/99 - A M10 HCP	45 mm	200 mm	95 mm	13 mm	11 mm	60 mm	20 mm	77 mm	12 mm	8 mm
HP 80/99 - A M12 HCP	45 mm	200 mm	95 mm	13 mm	13 mm	60 mm	20 mm	77 mm	12 mm	8 mm
HP 80/99 - A M16 HCP	45 mm	200 mm	95 mm	13 mm	17 mm	60 mm	20 mm	77 mm	12 mm	8 mm
HP 80/99 - B M12 HCP	45 mm	200 mm	95 mm	13 mm	13 mm	60 mm	20 mm	77 mm	12 mm	8 mm

Certification