Ducting Clamp PLU 2G-N

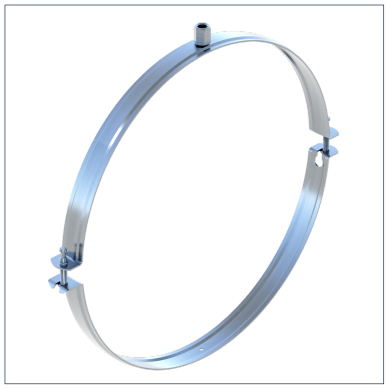

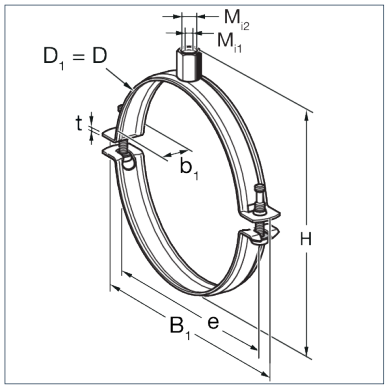

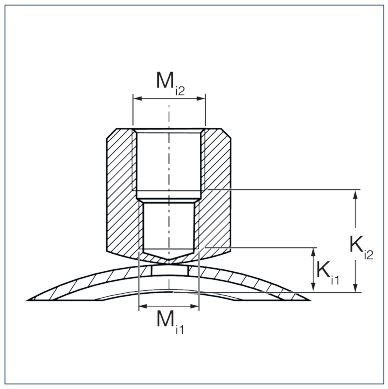

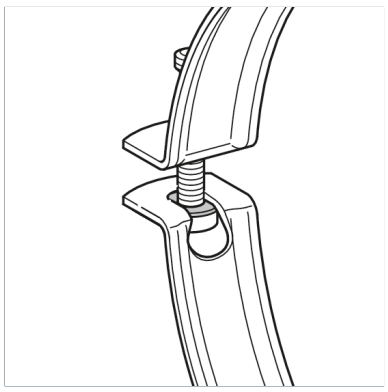

General Information

Two-piece pipe clamp for simple installation of spiral-seam ducts.

Installation

Tighten upper part of the pipe clamp without the interfering lower part. Hook the lower part, provided with a keyhole, into the fixed clamping bolt. After mounting of the pipe and locating into the pivot screw, the clamping bolt is fixed behind the bending; then tighten clamping bolt with max. 2 Nm.
Thread connection: M8/M10

Material Properties

Halogen-free	0
UV-resistant	0

Material

Primary element material	steel
Connecting element material	steel
Surface finish	electro galvanized (Fe//Zn)
Corrosion protection class	C2

Forces

Type	-V{Z,perm.}
PLU 2G-N DN 200	0.80 kN

Types

Type	Size max.	DN	Thread connection	Weight	Quantity	Part number
PLU 2G-N DN 200	208.00 mm	DN 200 (8")	M8/M10	0.180 kg/pcs.	50 pcs.	199725

Dimensions

Type	B1	b1	D	D1	e	H	Mi1	Mi2	t	Ki1	Ki2
PLU 2G-N DN 200	246 mm	20 mm	208 mm	208 mm	229 mm	231 mm	M8	M10	1.5 mm	5.7 mm	11.75 mm

Certification

Stahl

epd-global
Powered by EPD-Norway

Ducting Clamp PLU 2G-N

