Slide Element GS 41 A4

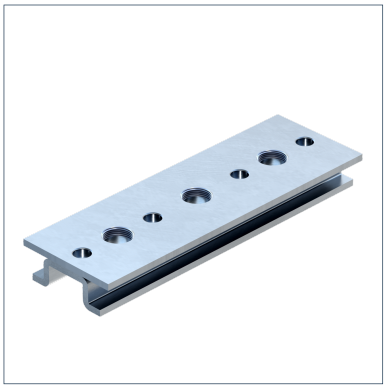

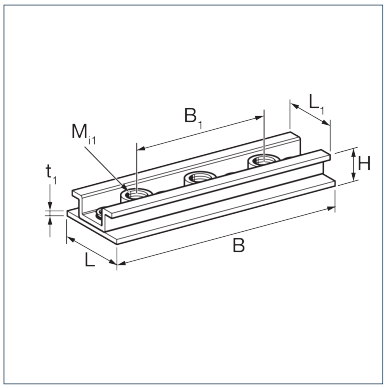

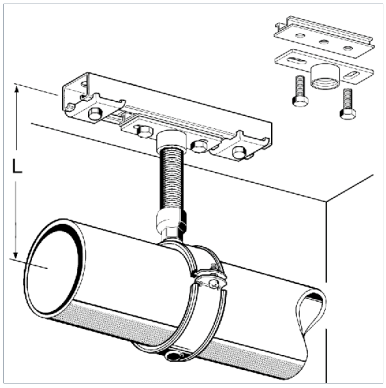

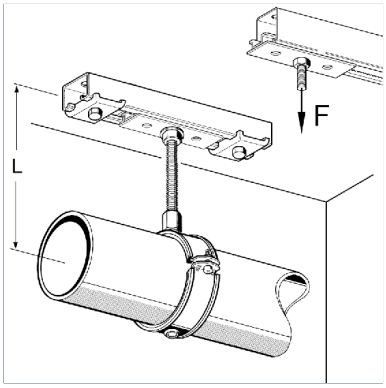

General Information

Slide element for use in Sikla Channels MS 41. For single and, using a Tandem Connector, double mounting options. The sliding distance is determined by the length of the rail. Holding Brackets are to be used for securing the slide element. Alternatively, the Sikla Channel Holder SH may be used. Any option in combination with Sikla Pipe Clamps Ratio S and Stabil D-3G may be realised. Various connection options with pipe clamps in the range between M12 and R1'. For these connection options, the corresponding Mounting Plate could be screwed directly with the slide element by means of bolts M10 x 20. Suitable for ceiling and floor mounting solutions and as a guide for rising pipes.

Installation

Lever arm L(max) for single mounting: 150 mm

Mechanical Properties

Static friction µ0	0,16

Material Properties

Elongation at break	560 %
Halogen-free	0
UV-resistant	0
Rebound elasticity	39 %

Material

Primary element material	Stainless Steel A4
Corrosion protection class	CRC II – III (C4 – C5 acc. to DIN EN ISO 12944-2)

Forces

Type	-V{Z,perm.}	V{Z,perm.}
GS 41-M10 A4	6.00 kN	4.00 kN

Note on loadings

The permissible bending moment of the connection elements (threaded rod or threaded tube) may restrict the application!

Types

Type	Weight	Quantity	Part number
GS 41-M10 A4	0.183 kg/pcs.	10 pcs.	190667

Dimensions

Type	B	B1	H	L	L1	Mi1	t1
GS 41-M10 A4	120 mm	73 mm	14 mm	40 mm	32 mm	M10	2.5 mm

Certification