Duo Clamp SRS 2G

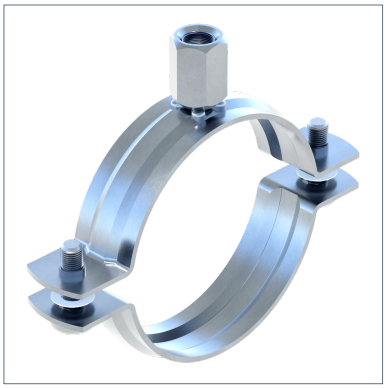

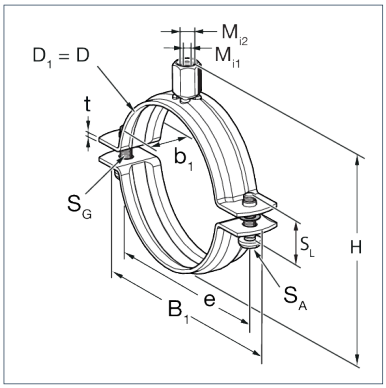

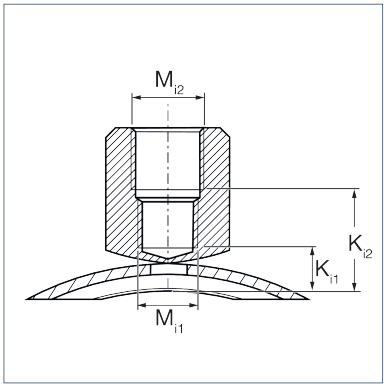

General Information

Two-piece pipe clamp with double thread connection (M8/M10) for the installation of pipelines.

Installation

Tightening torque: 2 Nm

Material Properties

Halogen-free	0
UV-resistant	0

Material

Primary element material	steel
Connecting element material	steel
Surface finish	electro galvanized (Fe//Zn)
Corrosion protection class	C2

Forces

Type	-V{Z,perm.}
SRS 2G 13- 18	0.60 kN
SRS 2G 19 - 22	0.60 kN
SRS 2G 23 - 26	0.60 kN
SRS 2G 27- 30	0.60 kN
SRS 2G 32- 36	0.60 kN
SRS 2G 40- 44	0.60 kN
SRS 2G 48- 54	0.60 kN
SRS 2G 55- 59	0.60 kN
SRS 2G 60- 66	0.60 kN
SRS 2G 68- 73	0.60 kN
SRS 2G 75- 80	2.50 kN
SRS 2G 84- 89	2.50 kN
SRS 2G 90- 98	2.50 kN
SRS 2G 94-101	2.50 kN
SRS 2G 102-108	2.50 kN
SRS 2G 110-115	2.50 kN
SRS 2G 118-125	2.50 kN
SRS 2G 129-136	2.50 kN

Duo Clamp SRS 2G

Type	-V{Z,perm.}
SRS 2G 138-144	2.50 kN
SRS 2G 144-153	2.50 kN
SRS 2G 159-167	2.50 kN

Types

Type	Size min.	Size max.	DN	Weight	Quantity	Part number
SRS 2G 13- 18	13.00 mm	18.00 mm	DN 10 (3/8")	0.045 kg/pcs.	100 pcs.	173216
SRS 2G 19 - 22	19.00 mm	22.00 mm	DN 15 (1/2")	0.047 kg/pcs.	100 pcs.	173225
SRS 2G 23 - 26	23.00 mm	26.00 mm	DN 20 (3/4")	0.049 kg/pcs.	100 pcs.	111470
SRS 2G 27- 30	27.00 mm	30.00 mm	DN 20 (3/4")	0.052 kg/pcs.	100 pcs.	173234
SRS 2G 32- 36	32.00 mm	36.00 mm	DN 25 (1")	0.056 kg/pcs.	100 pcs.	173243
SRS 2G 40- 44	40.00 mm	44.00 mm	DN 32 (1 1/4")	0.063 kg/pcs.	50 pcs.	173252
SRS 2G 48- 54	48.00 mm	54.00 mm	DN 40 (1 1/2")	0.075 kg/pcs.	50 pcs.	173261
SRS 2G 55- 59	55.00 mm	59.00 mm	DN 50 (2")	0.080 kg/pcs.	50 pcs.	182990
SRS 2G 60- 66	60.00 mm	66.00 mm	DN 50 (2")	0.085 kg/pcs.	50 pcs.	173279
SRS 2G 68- 73	68.00 mm	73.00 mm		0.092 kg/pcs.	25 pcs.	173288
SRS 2G 75- 80	75.00 mm	80.00 mm	DN 65 (2 1/2")	0.148 kg/pcs.	25 pcs.	173297
SRS 2G 84- 89	84.00 mm	89.00 mm	DN 80 (3")	0.164 kg/pcs.	25 pcs.	173306
SRS 2G 90- 98	90.00 mm	98.00 mm		0.167 kg/pcs.	25 pcs.	186023
SRS 2G 94-101	94.00 mm	101.00 mm	DN 90 (3 1/2")	0.180 kg/pcs.	25 pcs.	186032
SRS 2G 102-108	102.00 mm	108.00 mm	DN 90 (3 1/2")	0.190 kg/pcs.	25 pcs.	173315
SRS 2G 110-115	110.00 mm	115.00 mm	DN 100 (4")	0.196 kg/pcs.	25 pcs.	173324
SRS 2G 118-125	118.00 mm	125.00 mm		0.250 kg/pcs.	25 pcs.	186041
SRS 2G 129-136	129.00 mm	136.00 mm		0.270 kg/pcs.	25 pcs.	191387
SRS 2G 138-144	138.00 mm	144.00 mm	DN 125 (5")	0.278 kg/pcs.	25 pcs.	191396
SRS 2G 144-153	144.00 mm	153.00 mm		0.291 kg/pcs.	25 pcs.	191405
SRS 2G 159-167	159.00 mm	167.00 mm	DN 150 (6")	0.312 kg/pcs.	25 pcs.	191414

Dimensions

Type	B1	b1	D	D1	e	H	Mi1	Mi2	SG	SL	t	Ki1	Ki2
SRS 2G 13- 18	52.5 mm	20 mm	17 mm	17 mm	37.5 mm	41.5 mm	M8	M10	M5	15 mm	1.5 mm	3.89 mm	12.53 mm
SRS 2G 19 - 22	54.5 mm	20 mm	22 mm	22 mm	39.5 mm	46.5 mm	M8	M10	M5	15 mm	1.5 mm	3.89 mm	12.53 mm
SRS 2G 23 - 26	58.5 mm	20 mm	26 mm	26 mm	43.5 mm	50.5 mm	M8	M10	M5	15 mm	1.5 mm	3.89 mm	12.53 mm

Duo Clamp SRS 2G

Type	B1	b1	D	D1	e	H	Mi1	Mi2	SG	SL	t	Ki1	Ki2
SRS 2G 27- 30	62.5 mm	20 mm	30 mm	30 mm	47.5 mm	54.5 mm	M8	M10	M5	15 mm	1.5 mm	3.89 mm	12.53 mm
SRS 2G 32- 36	68.5 mm	20 mm	36 mm	36 mm	53.5 mm	60.5 mm	M8	M10	M5	15 mm	1.5 mm	3.89 mm	12.53 mm
SRS 2G 40- 44	76 mm	20 mm	44 mm	44 mm	61 mm	68.5 mm	M8	M10	M5	15 mm	1.5 mm	3.89 mm	12.53 mm
SRS 2G 48- 54	91.5 mm	20 mm	52 mm	52 mm	74.5 mm	76.5 mm	M8	M10	M6	20 mm	1.5 mm	3.89 mm	12.53 mm
SRS 2G 55- 59	99 mm	20 mm	60 mm	60 mm	82 mm	84.5 mm	M8	M10	M6	20 mm	1.5 mm	3.89 mm	12.53 mm
SRS 2G 60- 66	105 mm	20 mm	66 mm	66 mm	88 mm	90.5 mm	M8	M10	M6	20 mm	1.5 mm	3.89 mm	12.53 mm
SRS 2G 68- 73	112 mm	20 mm	72 mm	72 mm	95 mm	96.5 mm	M8	M10	M6	20 mm	1.5 mm	3.89 mm	12.53 mm
SRS 2G 75- 80	125 mm	25 mm	80 mm	80 mm	105 mm	106.5 mm	M8	M10	M6	25 mm	2 mm	5.5 mm	14.67 mm
SRS 2G 84- 89	134 mm	25 mm	88 mm	88 mm	114 mm	114.5 mm	M8	M10	M6	25 mm	2 mm	5.5 mm	14.67 mm
SRS 2G 90- 98	141 mm	25 mm	97 mm	97 mm	121 mm	123.5 mm	M8	M10	M6	25 mm	2 mm	5.5 mm	14.67 mm
SRS 2G 94-101	146.5 mm	25 mm	99 mm	99 mm	126.5 mm	125.5 mm	M8	M10	M6	25 mm	2 mm	5.5 mm	14.67 mm
SRS 2G 102-108	151 mm	25 mm	107 mm	107 mm	131 mm	133.5 mm	M8	M10	M6	25 mm	2 mm	5.5 mm	14.67 mm
SRS 2G 110-115	159.5 mm	25 mm	115 mm	115 mm	139.5 mm	141.5 mm	M8	M10	M6	25 mm	2 mm	5.5 mm	14.67 mm
SRS 2G 118-125	173 mm	25 mm	124 mm	124 mm	153 mm	152.5 mm	M8	M10	M6	30 mm	2.5 mm	6.61 mm	14.33 mm
SRS 2G 129-136	186 mm	25 mm	137 mm	137 mm	166 mm	165.5 mm	M8	M10	M6	30 mm	2.5 mm	6.61 mm	14.33 mm
SRS 2G 138-144	193 mm	25 mm	143 mm	143 mm	173 mm	171.5 mm	M8	M10	M6	30 mm	2.5 mm	6.61 mm	14.33 mm
SRS 2G 144-153	203 mm	25 mm	153 mm	153 mm	183 mm	181.5 mm	M8	M10	M6	30 mm	2.5 mm	6.61 mm	14.33 mm
SRS 2G 159-167	215 mm	25 mm	166 mm	166 mm	195 mm	194.5 mm	M8	M10	M6	40 mm	2.5 mm	6.61 mm	14.33 mm

Certification