Slide Set GS 2G PL ULTRAGLIDE

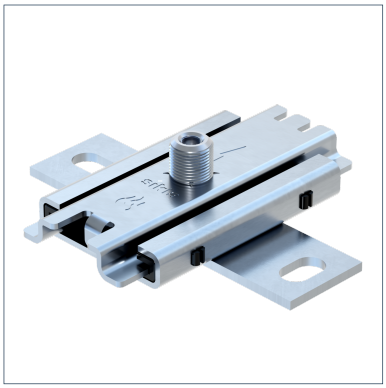

General Information

Slide Set for single and double mounting of mechanical equipment, to be used on Sikla Channels, brick or concrete walls and on bearers. To be used preferably in combination with Sikla Pipe Clamps Ratio S and Stabil D-3G. Various connection options with these pipe clamps ranging between M10 and R1'. For adapters for these connection options (see Adapter AD f/f). Sound absorption by means glass fibre reinforced PA slide rails. When using the version fett ULTRAglide /fett the resultant shear force is halved. By this the realisation of optimized supporting structures is possible.

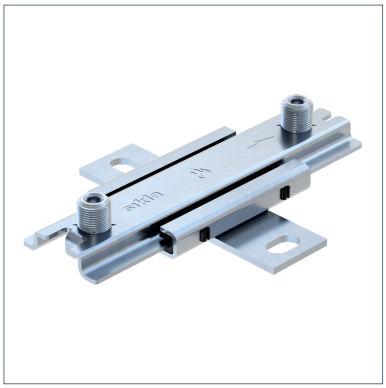

Temperature

Permissible long-term temperature	130 °C

Mechanical Properties

Static friction µ0	0,07

Material Properties

Halogen-free	0
UV-resistant	0

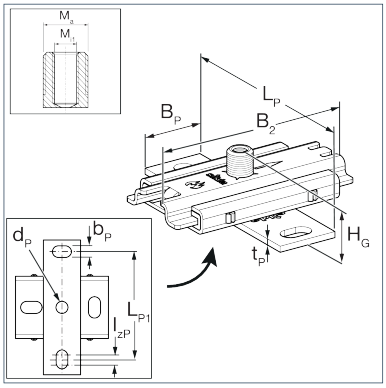

Material

Primary element material	steel
Sliding element material	PA GF Nano-coated
Surface finish	electro galvanized (Fe//Zn)
Corrosion protection class	C2

Forces

Type	-V{Z,perm.}	V{Z,perm.}
GS ULTRAGLIDE 2G - PL	0.60 kN	1.20 kN
GS ULTRAGLIDE 2G2 - PL	0.60 kN	1.20 kN

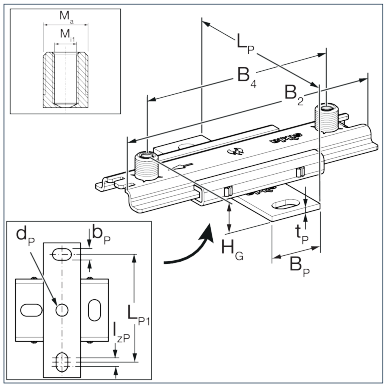

Note on loadings

The load capacity of the connecting parts used is to be considered. This applies particularly under stress of fire.

Fire resistance

Type	Fire Resistance 30 min	Fire Resistance 60 min	Fire Resistance 90 min	Fire Resistance 120 min
GS ULTRAGLIDE 2G - PL	0.6 kN	0.43 kN	0.28 kN	0.2 kN

Slide Set GS 2G PL ULTRAGLIDE

Type	Fire Resistance 30 min	Fire Resistance 60 min	Fire Resistance 90 min	Fire Resistance 120 min
GS ULTRAGLIDE 2G2 - PL	0.6 kN	0.43 kN	0.28 kN	0.2 kN

Types

Type	Max. lever arm	Max. slide path	Thread connection	Weight	Quantity	Part number
GS ULTRAGLIDE 2G - PL	300.00 mm	85.00 mm	M10/16	0.542 kg/ pcs.	25 pcs.	110583
GS ULTRAGLIDE 2G2 - PL	300.00 mm	140.00 mm	M10/M16	0.661 kg/ pcs.	25 pcs.	110585

Dimensions

Type	B2	B4	BP	bP	dP	HG	LP	LP1	Mi1	Ma	tP
GS ULTRAGLIDE 2G - PL	130 mm		40 mm	12.5 mm	13 mm	39 mm	145 mm	116 mm	M10	M16	4 mm
GS ULTRAGLIDE 2G2 - PL	200 mm	150 mm	40 mm	12.5 mm	13 mm	39 mm	145 mm	116 mm	M10	M16	4 mm

Certification

Documents

Installation - Slide Set GS 2G-PL