# Ducting Angle LUW A-L

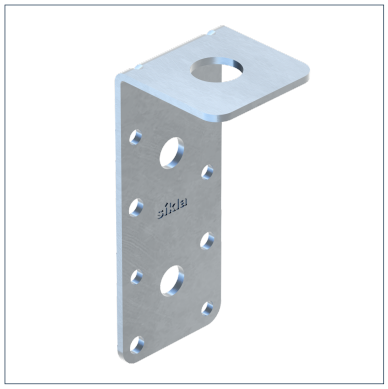

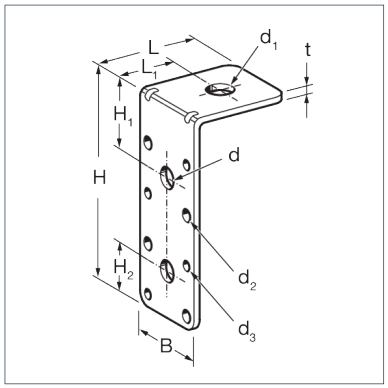


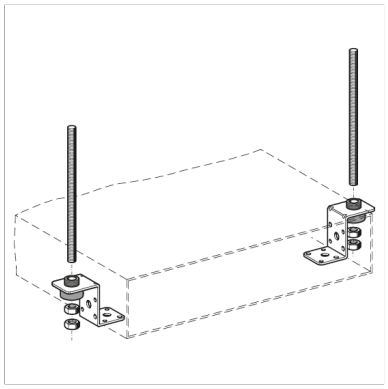

## General Information

Mounting Angle for rectangular ducts installed directly under the ceiling, or for suspended installation when using a threaded rod.

## Installation

Fixing to the duct with rivets (ø 4 - 5 mm), sheet metal screws (ø 4 - 5 mm) or M8 bolts.
Connection to building structure: M8/M10

## Material Properties

| | |
|---|---|
| Halogen-free | 0 |
| UV-resistant | 0 |

## Material

| | |
|---|---|
| Primary element material | steel |
| Surface finish | electro galvanized (Fe//Zn) |
| Corrosion protection class | C2 |

## Forces

| Type | -V{Z,perm.} |
|---|---|
| LUW A-L | 0.50 kN |

## Types

| Type | Weight | Quantity | Part number |
|---|---|---|---|
| LUW A-L | 0.055 kg/pcs. | 100 pcs. | 110496 |

## Dimensions

| Type | B | d | d1 | d2 | d3 | H | H1 | H2 | L | L1 | t |
|---|---|---|---|---|---|---|---|---|---|---|---|
| LUW A-L | 35 mm | 8.5 mm | 10.5 mm | 4.2 mm | 5 mm | 85 mm | 29.5 mm | 18.5 mm | 35 mm | 17.5 mm | 2 mm |

## Certification