Sound Absorber SDE 2 UG

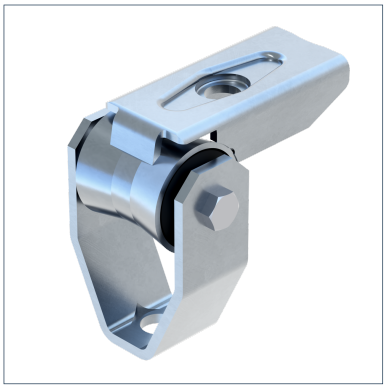

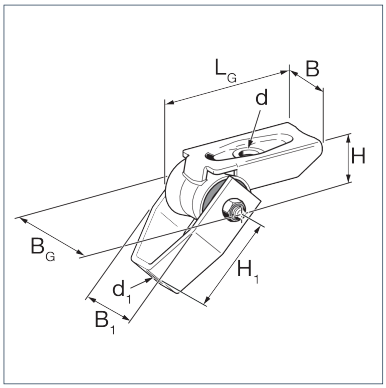

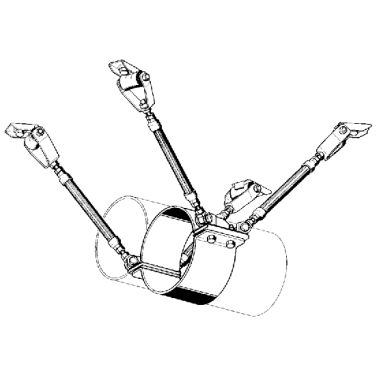

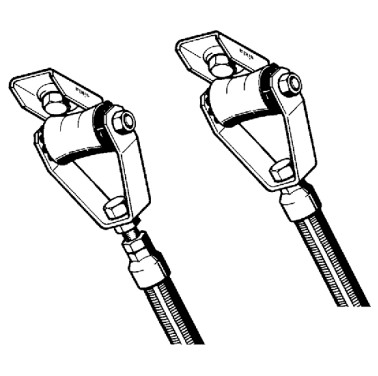

General Information

Universal sound absorption element for heavy loads. Particularly suitable for soundproof Installation according to DIN 4109 of single connections to M16 Threaded rods, also on girders or roof structures of any gradient of soundproof Fixed Points in trestle arrangement using 4 SDE 2-UG 16. Suitable for installation of soundproof inclined supports, or onto Sikla Channels (recommended from size 41/41).

Installation

For soundproof single point installation we recommend to connect the SDE 2-UG 16 to the centric thread connection of the Stabil D-3G.
For soundproof Fixed Points in trestle arrangement (see picture below), please see the notes in the Fixed Point section. Instead of the normally used 4 Universal Joints, 4 Sound Absorber SDE 2-UG 16 are used to fix on the building structure.
For mounting on Sikla channels, profiles from type 41/41 are recommended.

Temperature

Max. temperature	100 °C
Min. temperature	-30 °C

Mechanical Properties

Insertion isolation	15 dB(A)

Material Properties

Halogen-free	0
UV-resistant	0

Material

Primary element material	steel
Isolating element material	PUR
Surface finish	electro galvanized (Fe//Zn)
Corrosion protection class	C2

Forces

Type	-V{Z,perm.}	V{Z,perm.}
SDE 2-UG 16	10.00 kN	10.00 kN

Note on loadings

Lateral forces require additional support.
Dimensioning of the anchor of further joining elements may restrict the application.

Sound Absorber SDE 2 UG

Types

Type	Weight	Quantity	Part number
SDE 2-UG 16	1.030 kg/pcs.	10 pcs.	161053

Dimensions

Type	B	B1	BG	d	d1	H	H1	LG
SDE 2-UG 16	50 mm	71 mm	86.4 mm	16.5 mm	17 mm	33 mm	80 mm	120 mm

Certification