# Round Rod Coupling AD IG/IG A4

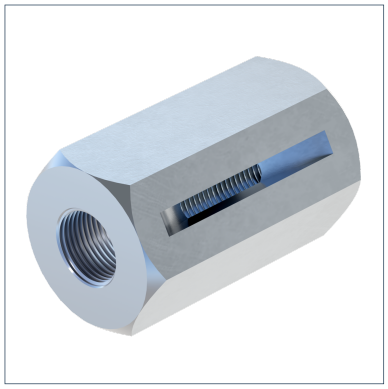

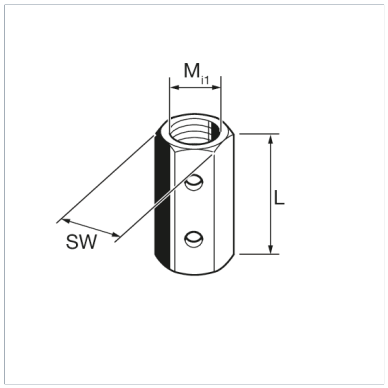


## General Information

Joining element for two threaded rods. With two inspection holes (dia. 5 mm) for examining the screwed-in length of thread. During assembly the Rod Coupling has to be locked with two hexagon nuts (not included in scope of delivery).

## Installation

During assembly the Rod Coupling has to be locked with two hexagon nuts (not included in scope of delivery).

## Material Properties

| | |
|---|---|
| Halogen-free | 0 |
| UV-resistant | 0 |

## Material

| | |
|---|---|
| Primary element material | Stainless Steel A4 |
| Corrosion protection class | CRC II – III (C4 – C5 acc. to DIN EN ISO 12944-2) |

## Types

| Type | Weight | Quantity | Part number |
|---|---|---|---|
| AD IG/IG M 8 X 30 A4 | 0.022 kg/pcs. | 100 pcs. | 104818 |
| AD IG/IG M10 X 30 A4 | 0.041 kg/pcs. | 100 pcs. | 104827 |
| AD IG/IG M12 X 35 A4 | 0.041 kg/pcs. | 50 pcs. | 104836 |
| AD IG/IG M16 X 45 A4 | 0.086 kg/pcs. | 50 pcs. | 104845 |

## Dimensions

| Type | L | Mi1 | SW |
|---|---|---|---|
| AD IG/IG M 8 X 30 A4 | 30 mm | M8 | 13 mm |
| AD IG/IG M10 X 30 A4 | 30 mm | M10 | 17 mm |
| AD IG/IG M12 X 35 A4 | 35 mm | M12 | 17 mm |
| AD IG/IG M16 X 45 A4 | 45 mm | M16 | 22 mm |

## Certification