Adapter AD IG/IG A4

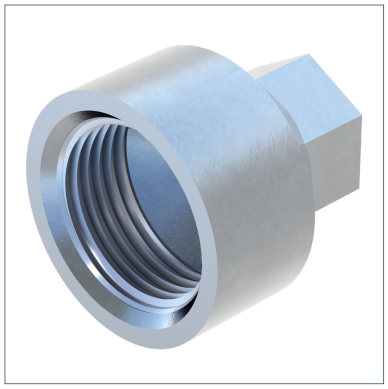

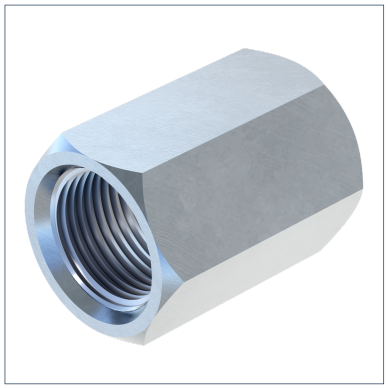

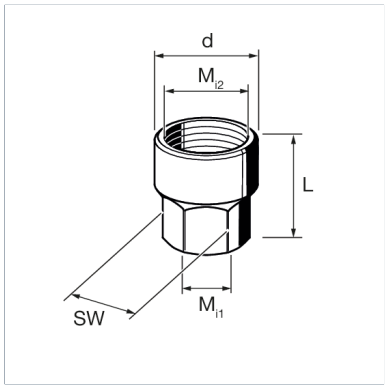

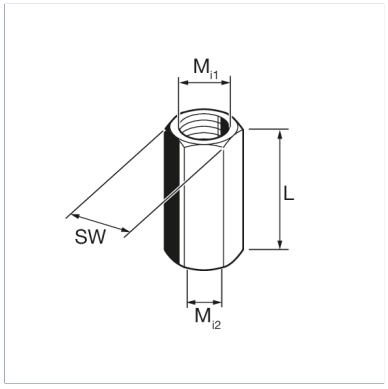

General Information

Adapter for additional connection options for all Sikla Pipe Clamps equipped with 3G triple thread nut, fixed points and threaded tubes. Adapter has internal threads on both sides.

Installation

During assembly the Adapter has to be locked with two hexagon nuts (not included in scope of delivery).

A/F of types:

Type	A/F [mm]
M16/M12	19
M16/M16	19
1/2"/M16	24
1/2"/1/2"	24
3/4"/M16	32
3/4"/1/2"	32
1"/M16	22
1"/1/2"	24

Material Properties

Halogen-free	0
UV-resistant	0

Material

Primary element material	Stainless Steel A4
Corrosion protection class	CRC II – III (C4 – C5 acc. to DIN EN ISO 12944-2)

Forces

Type	-V{Z,perm.}
AD IG/IG M16/M12 A4	10.00 kN
AD IG/IG M16/M16 A4	19.00 kN
AD IG/IG 1/2''/M16 A4	19.00 kN
AD IG/IG 1/2''/1/2'' A4	19.00 kN
AD IG/IG 3/4''/M16 A4	19.00 kN
AD IG/IG 3/4''/1/2'' A4	19.00 kN
AD IG/IG 1''/M16 A4	19.00 kN

Adapter AD IG/IG A4

Type	-V{Z,perm.}
AD IG/IG 1''/ 1/2'' A4	19.00 kN

Types

Type	L	Configuration	Weight	Quantity	Part number
AD IG/IG M16/M12 A4	35 mm	Form A	0.043 kg/pcs.	25 pcs.	170295
AD IG/IG M16/M16 A4	30 mm	Form A	0.036 kg/pcs.	50 pcs.	170286
AD IG/IG 1/2''/M16 A4	40 mm	Form A	0.078 kg/pcs.	10 pcs.	178373
AD IG/IG 1/2''/1/2'' A4	35 mm	Form A	0.062 kg/pcs.	25 pcs.	170301
AD IG/IG 3/4''/M16 A4	35 mm	Form A	0.082 kg/pcs.	10 pcs.	178382
AD IG/IG 3/4''/1/2'' A4	35 mm	Form A	0.112 kg/pcs.	10 pcs.	170310
AD IG/IG 1''/M16 A4	40 mm	Form B	0.130 kg/pcs.	10 pcs.	178364
AD IG/IG 1''/ 1/2'' A4	40 mm	Form B	0.164 kg/pcs.	10 pcs.	170338

Dimensions

Type	L	Mi1	Mi2	SW
AD IG/IG M16/M12 A4	35 mm	M12	M16	19 mm
AD IG/IG M16/M16 A4	30 mm	M16	M16	19 mm
AD IG/IG 1/2''/M16 A4	40 mm	M16	1/2"	24 mm
AD IG/IG 1/2''/1/2'' A4	35 mm	1/2"	1/2"	24 mm
AD IG/IG 3/4''/M16 A4	35 mm	M16	3/4"	32 mm
AD IG/IG 3/4''/1/2'' A4	35 mm	1/2"	3/4"	32 mm
AD IG/IG 1''/M16 A4	40 mm	M16	1"	22 mm
AD IG/IG 1''/ 1/2'' A4	40 mm	1/2"	1"	27 mm

Certification