# Resin Anchor Rod VMZ-A A4

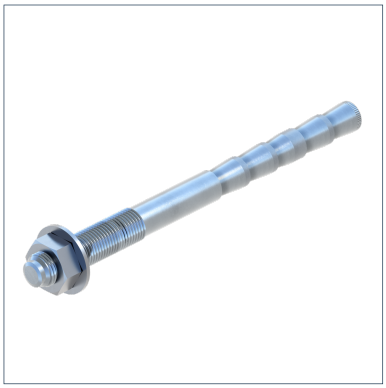

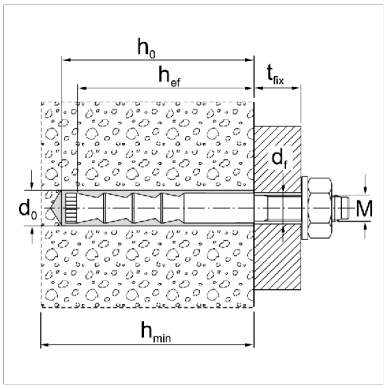


## General Information

Stainless Steel Anchor Rod for push-through and put-before mounting in concrete tensile zones in M&E services and plant construction (for anchoring heavy loads).

Suitable for attaching pipelines, channels, brackets, etc. in closed rooms - except for damp locations.

No special drill required. Small edge and centre distance. Approved for use under seismic action according to the performance category C1 and C2.

## Installation

1. Drill hole according to min. setting depth vertically to the surface.
2. Careful cleaning of drill hole with Steel brush and Blow-Out Pump.
3. Screw Mixing Nozzle onto the cartridge; foreshots to be removed and fill 2/3 of drill hole with resin starting from botton of the hole.
4. Drive the anchor manually into plastered borehole up to its embedment mark.
5. When reaching the embedment mark, plaster must be apparent.
6. Respect hardening time, when tighten the anchor with instructed torque.

Detailed assembly instruction is attached to the product.

## Material Properties

| | |
|---|---|
| Halogen-free | 0 |
| UV-resistant | 0 |

## Material

| | |
|---|---|
| Primary element material | Stainless Steel A4 |
| Corrosion protection class | CRC II – III (C4 – C5 acc. to DIN EN ISO 12944-2) |

## Fire resistance

| Type | Fire Resistance 30 min | Fire Resistance 60 min | Fire Resistance 90 min | Fire Resistance 120 min |
|---|---|---|---|---|
| VMZ-A 80 M12-25/125 A4 | 9.86 kN | 4.59 kN | 1.86 kN | 0.56 kN |

## Types

| Type | L | Weight | Quantity | Part number |
|---|---|---|---|---|
| VMZ-A 80 M12-25/125 A4 | 125.00 mm | 0.128 kg/pcs. | 10 pcs. | 112647 |

## Certification

Europäische Technische Zulassung - Option 1 für gerissenen Beton
ETA-10/0260

Sikla Approval ETA-15/0260

## Documents

Sikla Anchor Injection Systems