Screwbolt TSM-IM

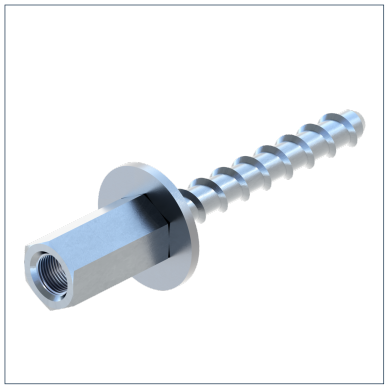

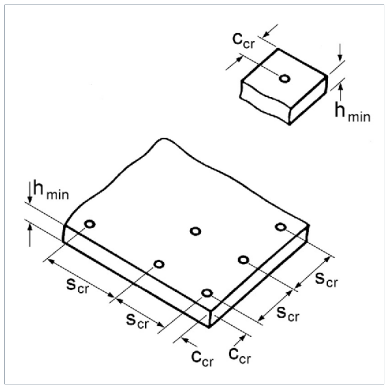

General Information

Suitable for quick and safe fixation of Sikla pipe clamps and further components to concrete and masonry ceilings or walls. To be applied in dry rooms not exposed to high corrosion resistance requirements. European Technical Assessment for anchoring in cracked and non-cracked concrete (Option 1). European Technical Assessment for multiple use for non-structural systems in concrete and precast pre-stressed hollow core slabs. ZApproved for applications under seismic impact of category C1 (Types, diameters and anchoring depths are shown in the 'type overview' and ETA-16/0655. Also fixes into pressure-resistant natural stones and different solid bricks (not part of ETA approval / guideline). Small edge and axial distance due to low expansion pressure. Low drillling effort

Installation

Screw in the bolt screw in pre-drilled hole. The special thread guarantees a mechanical form lock with the base material. Fine adjustment of depth is possible if the screwbolt is initially installed too deep.

Type 6x35 K: Only to be used as multiple fixing for non-load-bearing systems in concrete and prestressed concrete hollow plate ceilings.

Material Properties

Halogen-free	0
UV-resistant	0

Material

Primary element material	steel
Surface finish	electro galvanized (Fe//Zn)
Corrosion protection class	C2

Note on loadings

For load values, see additional documents.

Additional information

Further technical information (load capacities under fire exposure, appr. loads in further concrete classes and precast pre-stressed hollow core slabs) are shown in the download area.

Types

Type	L	Weight	Quantity	Part number
TSM-IM 6X 35 K M8/10	35.00 mm	0.034 kg/pcs.	50 pcs.	115028
TSM-IM 6X 55 IM M8/10	55.00 mm	0.039 kg/pcs.	50 pcs.	115721

Screwbolt TSM-IM

Certification

ETA-16/0655 and ETA-16/0656

Documents

Screwbolt TSM - ETA 16/0656

Screwbolt TSM - ETA 16/0655

DoP - Srewbolt TSM (Multiple use)

VdS Approval - Sikla Anchors – Types AN, BZ, TSM (DN 0–100)

Sikla Metal Anchor Systems

Screwbolt TSM - Type Overview

Screwbolt TSM-IM - Technical Data