Nail Anchor PN 27

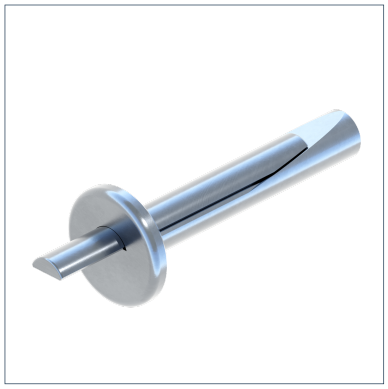

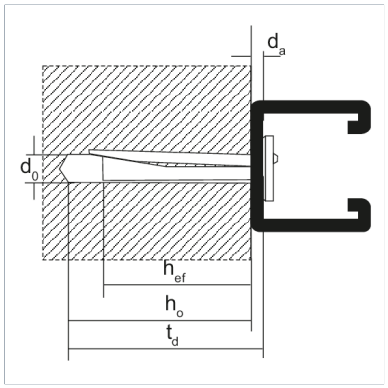

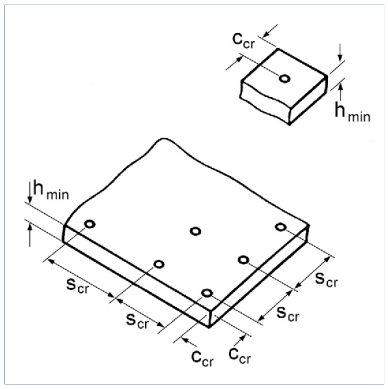

General Information

Suitable for push-through mounting solutions for quick and safe fixation to concrete ceilings or walls in closed rooms - not suitable for damp locations. Easy drilling (6 mm only) and simple impact mounting.

Installation

Setting Tool PN is most suited for mounting purposes.

Material Properties

Halogen-free	0
UV-resistant	0

Material

Primary element material	steel
Surface finish	electro galvanized (Fe//Zn)
Corrosion protection class	C2

Fire resistance

Type	Fire Resistance 30 min	Fire Resistance 60 min	Fire Resistance 90 min	Fire Resistance 120 min
PN 27 N6X35	0.8 kN	0.7 kN	0.6 kN	0.4 kN

Types

Type	Weight	Quantity	Part number
PN 27 N6X35	0.011 kg/pcs.	100 pcs.	196298

Certification

ETA-Approval: ETA-06/0259
Approved in the tensile zone for multiple mounting solutions to concrete exposed to mainly dead static loading.

Documents

Nail Anchor PN 27 - Technical Data