Axial Stop Variable VAS F 80 HCP

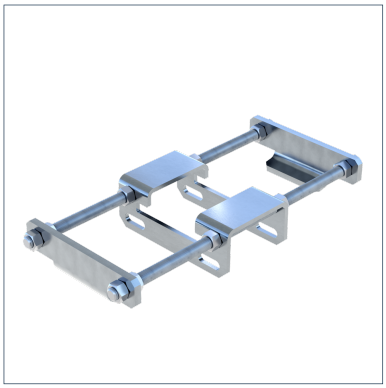

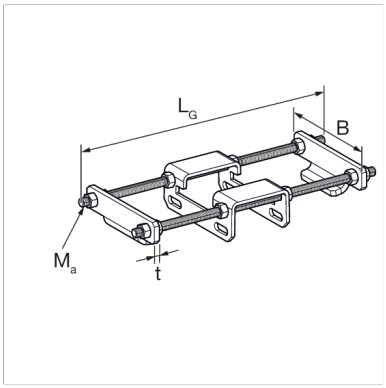

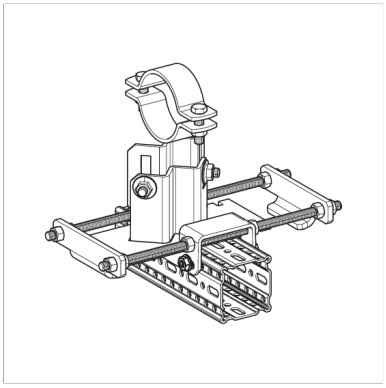

General Information

Modification of the siMotec pipe shoes to a double-sided variable axial stop, for use with siFramo F 80 profiles. Using the Axial stop, the pipe shoe can move axially through the pipe to a predefined degree of displacement, with restricted limits in both axial directions.

Installation

The sliding plate of the pipe shoe is dismantled. The shoe bracket is connected to the beam section F 80 with 4 FLS F self-forming screws. The 500 mm threaded rods are cut to the required length on site. The required amount of axial movement is adjusted using the supplied nuts, with a maximum displacement of 125 mm, equating to half of the sliding plate Forces in the axial direction can only be achieved if anti-slip devices (e.g. cleats/ stoppers) are used properly. These must be provided when designing the pipeline and are the responsibility of the pipeline manufacturer.

Material Properties

Halogen-free	0
UV-resistant	0

Material

Primary element material	steel
Surface finish	HCP
Corrosion protection class	C4

Forces

Type	-V{X,perm.}	V{X,perm.}
VAS F 80 HCP	12.00 kN	12.00 kN

Note on loadings

Load capacities correspond to the values of the fixed point bracket XW F, see documentation in the catalogue. However, maximum axial load is 12 kN per Axial stop.

Additional information

Also available with DualShield for high corrosion protection within C5H environments.

Types

Type	Weight	Quantity	Part number
VAS F 80 HCP	2.480 kg/pcs.	1 pcs.	802789

Dimensions

Type	B	LG	Ma	t
VAS F 80 HCP	160 mm	500 mm	M12	8 mm

Certification

