Support U-UB F100

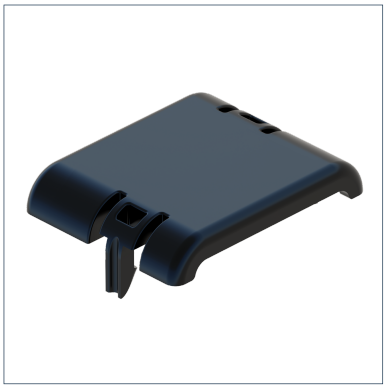

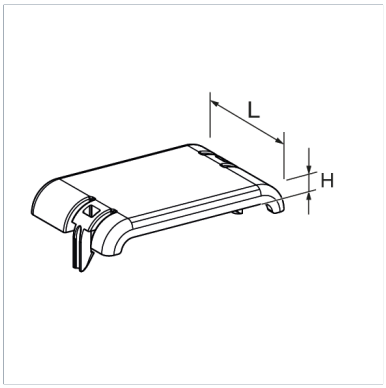

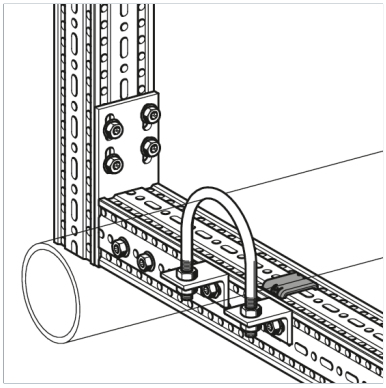

General Information

Insulation and surface protection pad to be used on demand when a pipes expansion and contraction occurs directly on the TP F section.

Temperature

Max. temperature	130 °C
Min. temperature	-20 °C

Material Properties

Halogen-free	0
UV-resistant	0

Material

Primary element material	PA

Forces

Type	V{Z,perm.}
U-UB F100	6.50 kN

Types

Type	Weight	Quantity	Part number
U-UB F100	0.011 kg/pcs.	50 pcs.	113094

Dimensions

Type	L	H
U-UB F100	40 mm	5 mm