Beam Section TP F 80 HCP

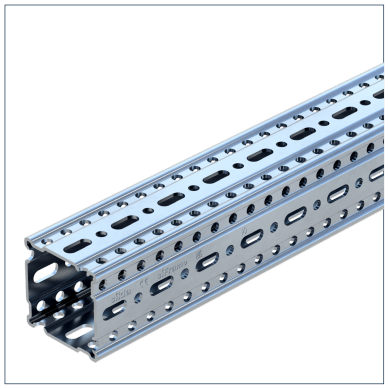

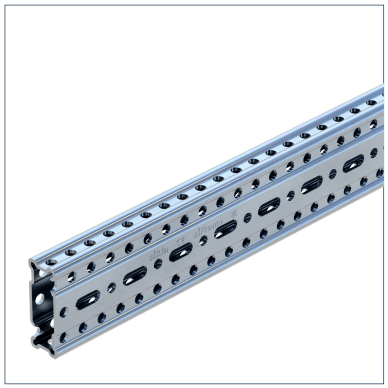

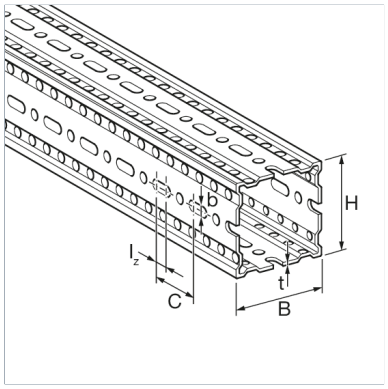

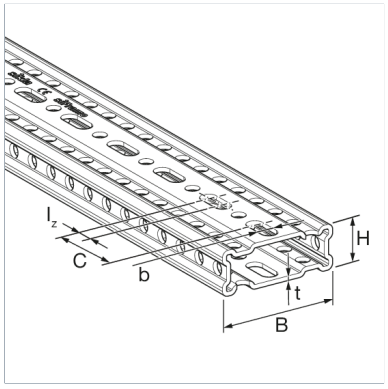

General Information

Galvanised box-section for fabrication of steel frames. Designed for both simple two-dimensional supports and complex volumetric arrangements. Holes are designed to receive Self Forming Screw FLS in conjunction with relevant components.

Material Properties

Halogen-free	0
UV-resistant	0

Material

Primary element material	steel
Surface finish	HCP
Corrosion protection class	C4

Forces

Type	-V{X,Rd}	V{X,Rd}	-V{Y,Rd}	V{Y,Rd}	-V{Z,Rd}	V{Z,Rd}
TP F 80/30 6M HCP	155.4 kN	155.4 kN	14.9 kN	14.9 kN	8.1 kN	8.1 kN
TP F 80 6M HCP	193.6 kN	193.6 kN	20.8 kN	20.8 kN	20.8 kN	20.8 kN

Moments

Type	-M{X,Rd}	M{X,Rd}	-M{Y,Rd}	M{Y,Rd}	-M{Z,Rd}	M{Z,Rd}
TP F 80/30 6M HCP	0.4 kNm	0.4 kNm	2.2 kNm	2.2 kNm	1.3 kNm	1.3 kNm
TP F 80 6M HCP	1.3 kNm	1.3 kNm	40 kNm	40 kNm	40 kNm	40 kNm

Cross-section values 1

Type	Elastic modulus Wy	Elastic modulus Wz	Second moment of area Iy	Second moment of area Iz
TP F 80/30 6M HCP	7.75 cm³	4.12 cm³	33.15 cm^4	6.23 cm^4
TP F 80 6M HCP	13.25 cm³	13.25 cm³	61.54 cm^4	61.54 cm^4

Cross-section values 2

Type	Torsional constant It	Cross-sectional area A
TP F 80/30 6M HCP	7.91 cm^4	2.57 cm²
TP F 80 6M HCP	45.13 cm^4	4.73 cm²

Note on loadings

The specified load values are design loads Rd and include a partial safety factor γM2 = 1.25 (DIN EN 1993-1-8:2025-04, Table 4.1)

A partial safety factor of γG = 1.35 (DIN EN 1990:2021-10, Table A1.2(B)) must be taken into account for permanent loads.

Additional information

Also available with DualShield for high corrosion protection within C5H environments.

Types

Type	Weight	Quantity	Part number
TP F 80/30 6M HCP	4.400 kg/m	6 m	113407
TP F 80 6M HCP	6.400 kg/m	6 m	192539

Dimensions

Type	B	b	C	H	Iz	t
TP F 80/30 6M HCP	80 mm	11 mm	50 mm	30 mm	15 mm	3 mm
TP F 80 6M HCP	80 mm	11 mm	50 mm	80 mm	15 mm	3 mm

Certification

CE mark (Declaration of performance see www.sikla.co.uk/service/downloads) - ETA-24/0471

Documents

siFramo - ETA-24/0471

Static Guideline - siFramo & siMotec