Flange Screw SCR FLA A4



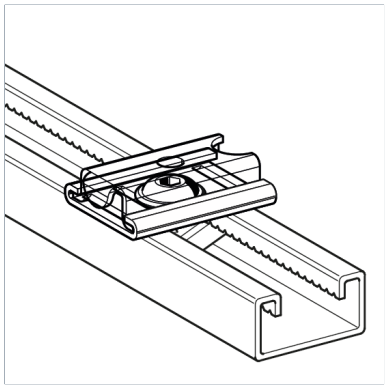

General Information

Ideal for connecting two Sikla Channels MS 41 as well as for mounting the GS G1 slide set for channel system 41.

Installation

Drive: Internal hexagon
Standard: ISO 7380

Material Properties

Halogen-free	0
UV-resistant	0

Material

Primary element material	Stainless Steel A4
Corrosion protection class	CRC II – III (C4 – C5 acc. to DIN EN ISO 12944-2)

Types

Type	L	Weight	Quantity	Part number
SCR FLA M10x 20 A4	20.00 mm	0.019 kg/pcs.	100 pcs.	803400