Assembly Group BG14 F 80-1/2'' HCP

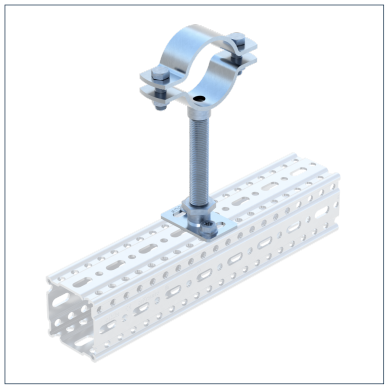

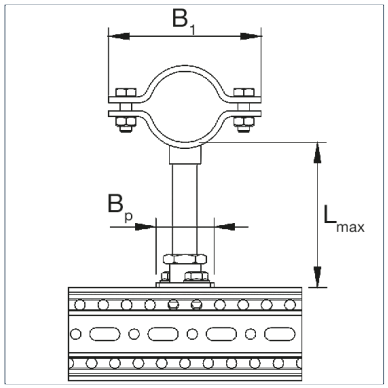

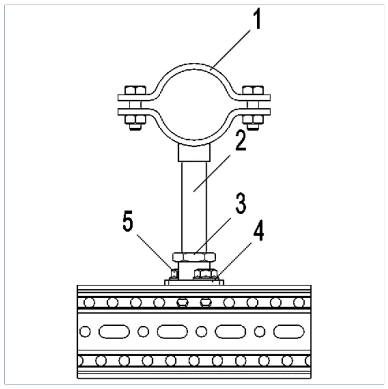

General Information

An Assembly Group containing components to make up a permanent pipe connection with the heavy Pipe Clamp Stabil I-1/2'. The Assembly Group is designed for use with the Beam Section TP F 80. It is connected using the Self Forming Screw FLS F, and the height is adjusted via the Threaded Tube 1/2'.

Installation

The assembly of the individual components to form an Assembly Group is carried out during the course of pipe installation on the construction site.

Material Properties

Halogen-free	0
UV-resistant	0

Material

Primary element material	steel
Connecting element material	steel
Surface finish	HCP
Corrosion protection class	C4

Types

Type	Size min.	Size max.	DN	Weight	Quantity	Part number
BG14 F 80-1/2'' DN 15 HCP	17.00 mm	22.00 mm	DN 15 (1/2")	0.830 kg/ pcs.	1 pcs.	110209
BG14 F 80-1/2'' DN 20 HCP	23.00 mm	27.00 mm	DN 20 (3/4")	0.840 kg/ pcs.	1 pcs.	110210
BG14 F 80-1/2'' DN 25 HCP	30.00 mm	34.00 mm	DN 25 (1")	0.870 kg/ pcs.	1 pcs.	110211
BG14 F 80-1/2'' DN 32 HCP	40.00 mm	44.00 mm	DN 32 (1 1/4")	0.910 kg/ pcs.	1 pcs.	110212
BG14 F 80-1/2'' DN 40 HCP	45.00 mm	49.00 mm	DN 40 (1 1/2")	0.980 kg/ pcs.	1 pcs.	110213
BG14 F 80-1/2'' DN 50 HCP	57.00 mm	61.00 mm	DN 50 (2")	1.150 kg/ pcs.	1 pcs.	110214
BG14 F 80-1/2'' DN 65 HCP	73.00 mm	77.00 mm	DN 65 (2 1/2")	1.230 kg/ pcs.	1 pcs.	110215
BG14 F 80-1/2'' DN 80 HCP	85.00 mm	89.00 mm	DN 80 (3")	1.290 kg/ pcs.	1 pcs.	110216
BG14 F 80-1/2'' DN 100 HCP	109.00 mm	115.00 mm	DN 100 (4")	1.580 kg/ pcs.	1 pcs.	110217

Assembly Group BG14 F 80-1/2'' HCP

Dimensions

Type	B1	BP	Lmax	Lmax horizontal
BG14 F 80-1/2'' DN 15 HCP	85 mm	50 mm	200 mm	150 mm
BG14 F 80-1/2'' DN 20 HCP	92 mm	50 mm	200 mm	150 mm
BG14 F 80-1/2'' DN 25 HCP	100 mm	50 mm	200 mm	150 mm
BG14 F 80-1/2'' DN 32 HCP	112 mm	50 mm	200 mm	150 mm
BG14 F 80-1/2'' DN 40 HCP	117 mm	50 mm	200 mm	150 mm
BG14 F 80-1/2'' DN 50 HCP	139 mm	50 mm	200 mm	150 mm
BG14 F 80-1/2'' DN 65 HCP	156 mm	50 mm	200 mm	150 mm
BG14 F 80-1/2'' DN 80 HCP	168 mm	50 mm	200 mm	150 mm
BG14 F 80-1/2'' DN 100 HCP	194 mm	50 mm	200 mm	150 mm

Certification