Channel Nut NT 2

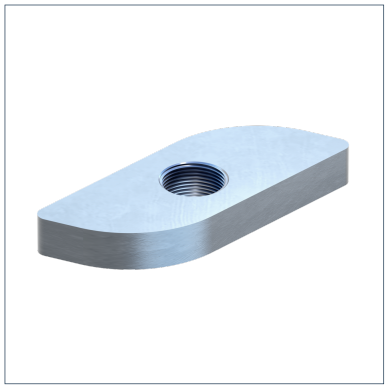

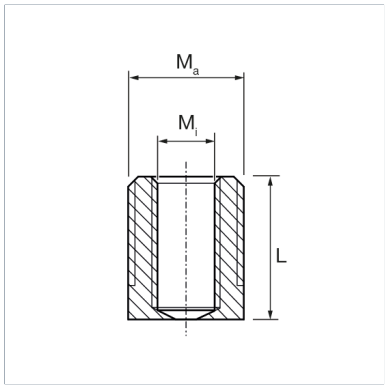

General Information

Channel Nuts type 27 are suitable for channels of 27 mm width.

Material Properties

Halogen-free	0
UV-resistant	0

Material

Primary element material	steel
Surface finish	electro galvanized (Fe//Zn)
Corrosion protection class	C2

Types

Type	Weight	Quantity	Part number
NT GR2 M 8	0.018 kg/pcs.	100 pcs.	124407
NT GR2 M10	0.017 kg/pcs.	100 pcs.	143402

Dimensions

Type	L
NT GR2 M 8	15.5 mm
NT GR2 M10	15.5 mm

Certification