Angle Connector CN CC41

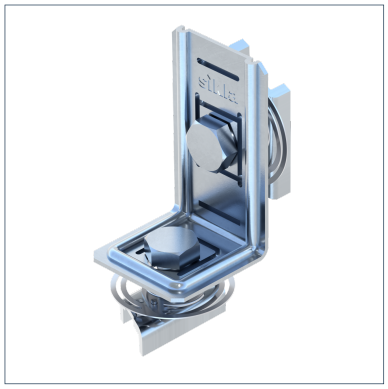

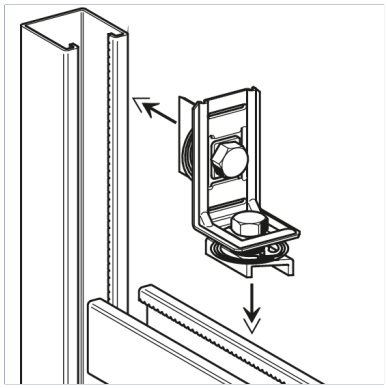

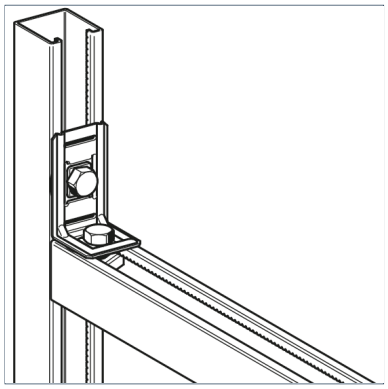

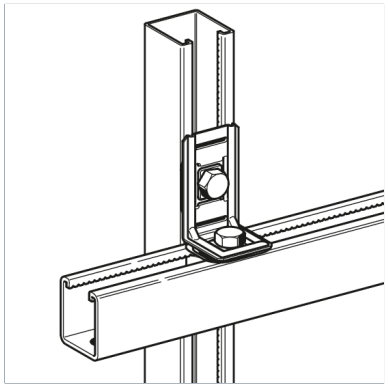

General Information

Pre-assembled connecting element especially for frame structures made of channels. High-speed assembly system for 90° connection of Channels MS 41. Locks automatically by pushing down the bolt head and at the same time supports its own weight. Secure, form-locking, non-positive connection. Serrated speed nut with clamping bolt M10. Ideal shaping for high stiffness.

Installation

Tightening torque: 40 Nm

Material Properties

Halogen-free	0
UV-resistant	0

Material

Primary element material	steel
Surface finish	electro galvanized (Fe//Zn)
Corrosion protection class	C2

Forces

Type	-V{X,perm.}	V{X,perm.}	-V{Z,perm.}	V{Z,perm.}
CN CC41 - 90°	4.00 kN	4.00 kN	4.00 kN	4.00 kN

Note on loadings

Working load as axial load per crossbar with 2 CC Angle Connectors 90°.

Types

Type	Weight	Quantity	Part number
CN CC41 - 90°	0.160 kg/pcs.	25 pcs.	180236

Dimensions

Type	B	H	H1	L	t
CN CC41 - 90°	41 mm	70 mm	34.6 mm	41 mm	1.5 mm

Certification