Channel Bracket SH 41 HCP

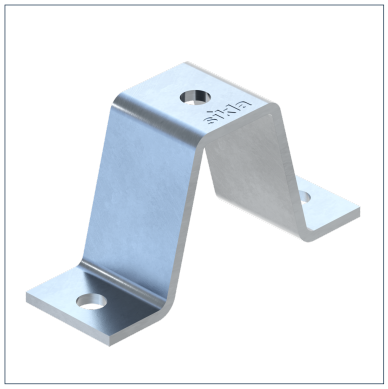

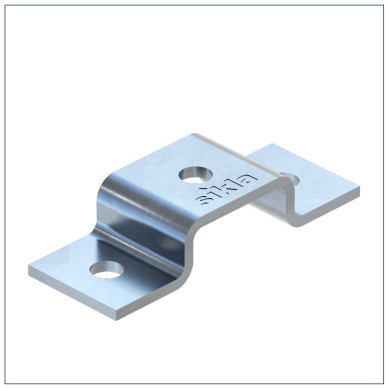

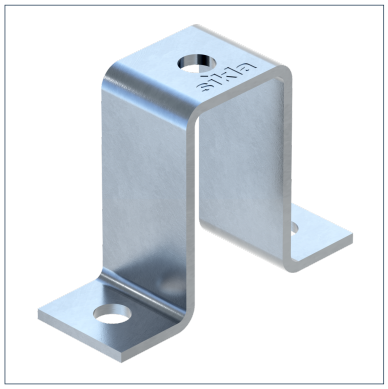

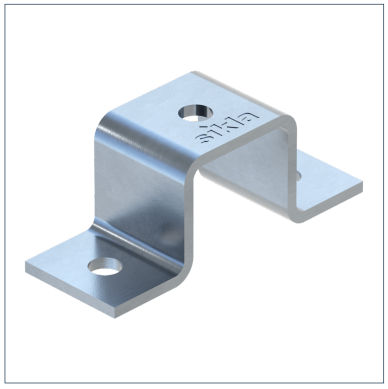

General Information

Comprehensive bracing construction of Sikla Channels: directly to the building structure or onto other channels for frame construction.

Material Properties

Halogen-free	0
UV-resistant	0

Material

Primary element material	steel
Surface finish	HCP
Corrosion protection class	C4

Types

Type	Weight	Quantity	Part number
SH 41/21 HCP	0.162 kg/pcs.	50 pcs.	189992
SH 41/41,41/21 D HCP	0.21 kg/pcs.	50 pcs.	183116
SH 41/62 HCP	0.281 kg/pcs.	25 pcs.	113917
SH 41-75/75 B HCP	0.496 kg/pcs.	25 pcs.	183134
SH 41/41 D HCP	0.322 kg/pcs.	10 pcs.	183143

Dimensions

Type	B	B1	B2	B3	d	L	H	t
SH 41/21 HCP	42 mm	111 mm	80 mm		11 mm	40 mm	18.5 mm	4 mm
SH 41/41,41/21 D HCP	42 mm	111 mm	80 mm		11 mm	40 mm	39 mm	4 mm
SH 41/62 HCP	42 mm	111 mm	80 mm		11 mm	40 mm	60 mm	4 mm
SH 41-75/75 B HCP	40.7 mm	150 mm	122 mm	73.9 mm	13 mm	50 mm	73 mm	5 mm
SH 41/41 D HCP	42 mm	111 mm	80 mm		13 mm	40 mm	80 mm	4 mm

Certification

Channel Bracket SH 41 HCP

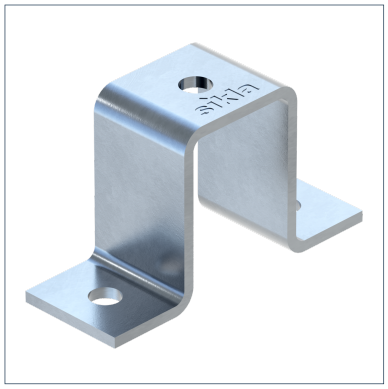

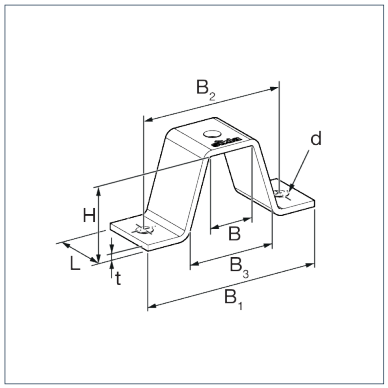

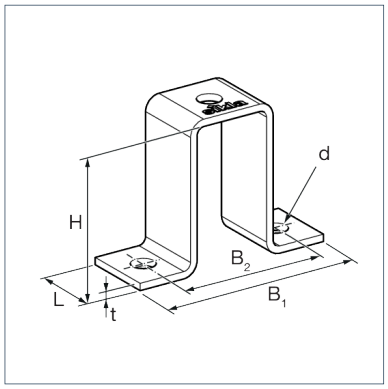

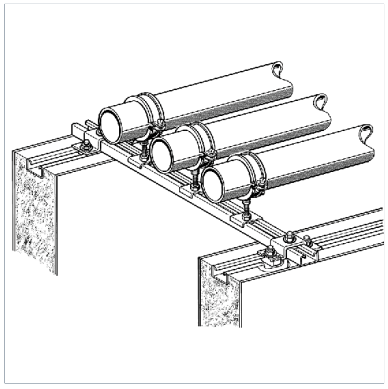

Channel Bracket SH 41 HCP

