Cantilever Bracket AK 41 A4

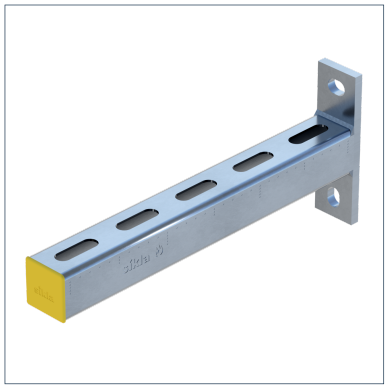

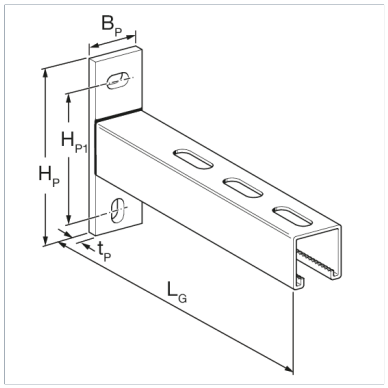

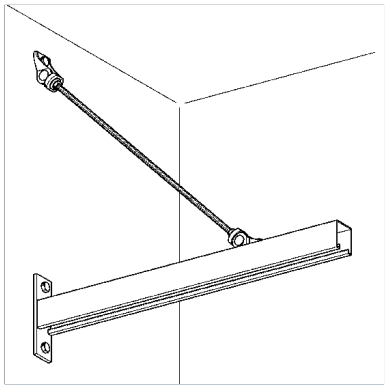

General Information

Recommended for single-armed wall suspension or fixing to other building structures.

Installation

When used in combination with slide elements, a Tie Rod is absolutely essential for absorbing the forces running along the centre line of the pipe.For cantilever lengths >= 500 mm we recommend the integration of a prop-up.

M12 anchors are fitted into the slotted holes (HP1). Dimensions of the slotted hole: 13mm x 18mm

Material Properties

Halogen-free	0
UV-resistant	0

Material

Primary element material	Stainless Steel A4
Corrosion protection class	CRC II – III (C4 – C5 acc. to DIN EN ISO 12944-2)

Forces

Type	-V{X,perm.}	V{X,perm.}	-V{Y,perm.}	V{Y,perm.}	-V{Z,perm.}	V{Z,perm.}
AK 41/41 - 200 A4	17.38 kN	17.38 kN	14.41 kN	14.41 kN	24.36 kN	24.36 kN
AK 41/41 - 260 A4	17.38 kN	17.38 kN	14.41 kN	14.41 kN	24.36 kN	24.36 kN
AK 41/41 - 320 A4	17.38 kN	17.38 kN	14.41 kN	14.41 kN	24.36 kN	24.36 kN
AK 41/41 - 445 A4	17.38 kN	17.38 kN	14.41 kN	14.41 kN	24.36 kN	24.36 kN

Moments

Type	-M{Y,perm.}	M{Y,perm.}	-M{Z,perm.}	M{Z,perm.}
AK 41/41 - 200 A4	0.53 kNm	0.53 kNm	0.5 kNm	0.5 kNm
AK 41/41 - 260 A4	0.53 kNm	0.53 kNm	0.5 kNm	0.5 kNm
AK 41/41 - 320 A4	0.53 kNm	0.53 kNm	0.5 kNm	0.5 kNm
AK 41/41 - 445 A4	0.53 kNm	0.53 kNm	0.5 kNm	0.5 kNm

Note on loadings

For load capacities, please see the charts of Cantilever Bracket 41/41 (galvanised).

Types

Type	LG	Weight	Quantity	Part number
AK 41/41 - 200 A4	195.5 mm	0.737 kg/pcs.	10 pcs.	115520
AK 41/41 - 260 A4	258 mm	0.827 kg/pcs.	10 pcs.	115539

Cantilever Bracket AK 41 A4

Type	LG	Weight	Quantity	Part number
AK 41/41 - 320 A4	320.5 mm	0.945 kg/pcs.	10 pcs.	115548
AK 41/41 - 445 A4	445.5 mm	1.253 kg/pcs.	10 pcs.	115557

Dimensions

Type	BP	HP	HP1	LG	tP
AK 41/41 - 200 A4	40 mm	134 mm	100 mm	195.5 mm	8 mm
AK 41/41 - 260 A4	40 mm	134 mm	100 mm	258 mm	8 mm
AK 41/41 - 320 A4	40 mm	134 mm	100 mm	320.5 mm	8 mm
AK 41/41 - 445 A4	40 mm	134 mm	100 mm	445.5 mm	8 mm

Certification