# Angle Connector EV CC41-4 HCP

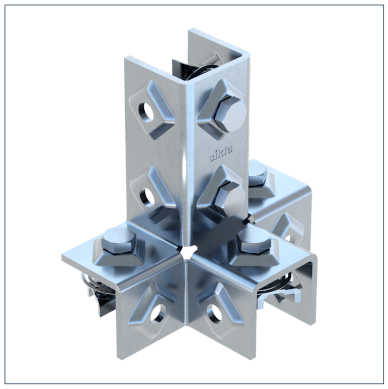

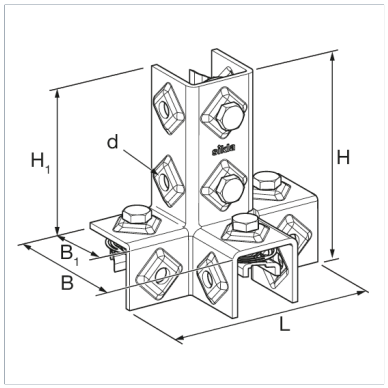


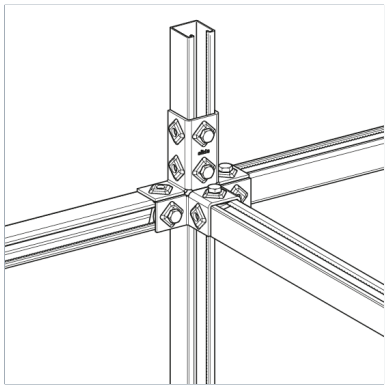

## General Information

Pre-assembled connecting element in HCP for three-dimensional frame structures, optimised for linking channels of the 41 series at an angle of 90°. The adjustment for the channel opening could still be chosen. Fast-Technique for 90° joints of Channel System 41. Locks automatically when being put in place and supports its own weight. Secure, form-locking, non-positive connection. Serrated Channel Nut with Hexagon Bolt M10. Ideal shaping for high stiffness. The proven Sikla rhomb guarantees a secure torque and preload force.

## Installation

To be used in pairs.
For channels rotated at 90°, only squarechannels 41/41 may be used (width of the mount: 41 mm).
Torque: 40 Nm

## Material Properties

| | |
|---|---|
| Halogen-free | 0 |
| UV-resistant | 0 |

## Material

| | |
|---|---|
| Primary element material | steel |
| Connecting element material | steel |
| Surface finish | HCP |
| Corrosion protection class | C4 |

## Forces

| Type | -V{Z,perm.} | V{Z,perm.} |
|---|---|---|
| EV CC41-4 HCP | 3.30 kN | 3.30 kN |

## Note on loadings

Max. perm. Load as centre load per crossbar fixed with 2 Angle Connectors EV CC 41-4.

## Types

| Type | Weight | Quantity | Part number |
|---|---|---|---|
| EV CC41-4 HCP | 1.089 kg/pcs. | 10 pcs. | 117464 |

## Dimensions

| Type | B | B1 | d | H | H1 | L |
|---|---|---|---|---|---|---|
| EV CC41-4 HCP | 92 mm | 45 mm | 11 mm | 142 mm | 101 mm | 144 mm |

## Certification

## Documents

Sikla New Strut Connectors