Lateral Brace CFB CC41 HCP

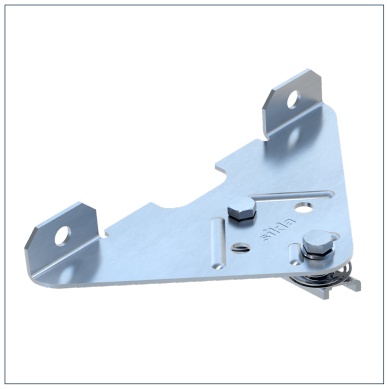

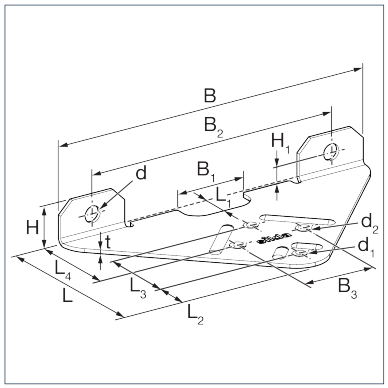

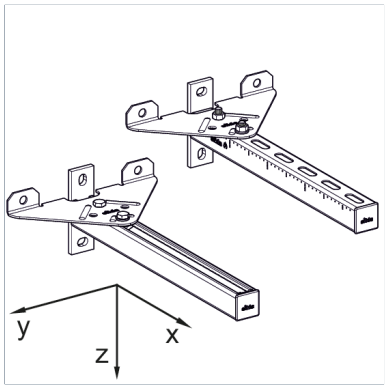

General Information

The Cross support CFB is a shear force stabilizer for Sikla Cantilever Brackets 41. The Cross Support intakes shear forces specially the force caused due to length expansion on piping with warm applications. Using the Cross Support CFB can increase the capability of handling higher shear forces.

Installation

CFB CC41 for mounting on the channel slot:
The CC-Connector is already pre-mounted on the cross support. After inserting inside the channel slot with a light press the CC-Threaded Plate will move to the right and a clicking sound will be heard. The de-installation of the CC-Connector will success be reversing the above instructions. The cross support must be well inserted and the screws must be fully fixed.

As an Option the Cross support can be mounted using 2 anchors to a wall (in order to increase the capability of handling higher shear forces). The Anchors are to be ordered separately.

Material Properties

Halogen-free	0
UV-resistant	0

Material

Primary element material	steel
Surface finish	HCP
Corrosion protection class	C4

Forces

Type	V{Y,perm.}
CFB CC41 HCP	0.99 kN

Moments

Type	M{Z,perm.}
CFB CC41 HCP	0.15 kNm

Note on loadings

Usability value (a safety value of 2,0 was considered).

Types

Type	Weight	Quantity	Part number
CFB CC41 HCP	0.631 kg/pcs.	10 pcs.	803641

Lateral Brace CFB CC41 HCP

Dimensions

Type	B	B1	B2	B3	d	d1	d2	H	H1	L	L1	L2	L3	L4	t
CFB CC41 HCP	260 mm	56 mm	205 mm	56.5 mm	13 mm	11 mm	12 mm	33 mm	15 mm	135 mm	18 mm	20 mm	62.5 mm	78 mm	3 mm

Certification