# Corner Bracket EW 41-1 HCP

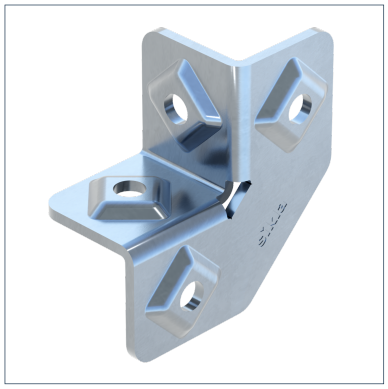

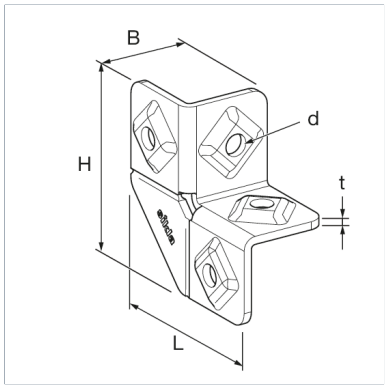


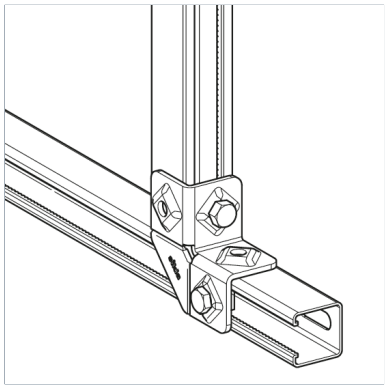

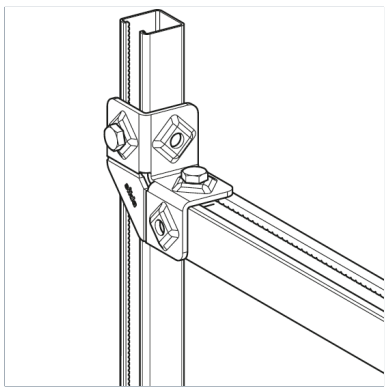

## General Information

Connecting element for frame structures with channels of the 41 series. Depending on the application the direction of the channel opening can be freely choosen.

## Installation

To be used in pairs.
Torque: 40 Nm

## Material Properties

| | |
|---|---|
| Halogen-free | 0 |
| UV-resistant | 0 |

## Material

| | |
|---|---|
| Primary element material | steel |
| Surface finish | HCP |
| Corrosion protection class | C4 |

## Forces

| Type | -V{X,perm.} | V{X,perm.} | -V{Z,perm.} | V{Z,perm.} |
|---|---|---|---|---|
| EW 41-1 HCP | 5.00 kN | 5.00 kN | 5.00 kN | 5.00 kN |

## Note on loadings

Max. perm. Load as centre load per crossbar fixed with 2 Corner Brackets EW 41-1.

## Types

| Type | Weight | Quantity | Part number |
|---|---|---|---|
| EW 41-1 HCP | 0.282 kg/pcs. | 25 pcs. | 117351 |

## Dimensions

| Type | B | d | H | L | t |
|---|---|---|---|---|---|
| EW 41-1 HCP | 45 mm | 11 mm | 93 mm | 93 mm | 4 mm |

## Certification

# Corner Bracket EW 41-1 HCP

