Corner Bracket EW 41-1

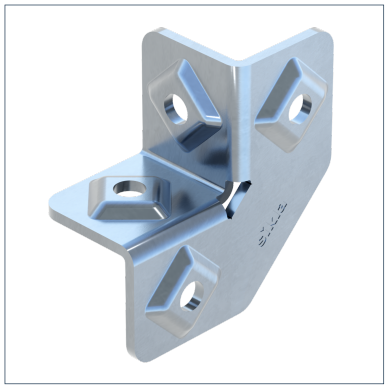

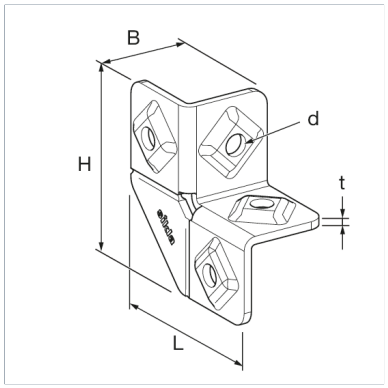

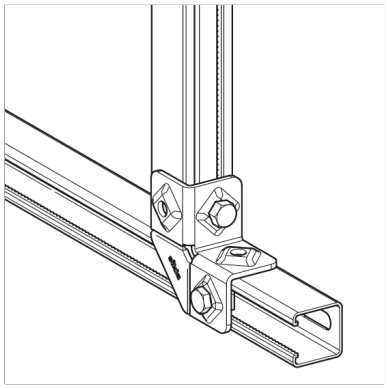

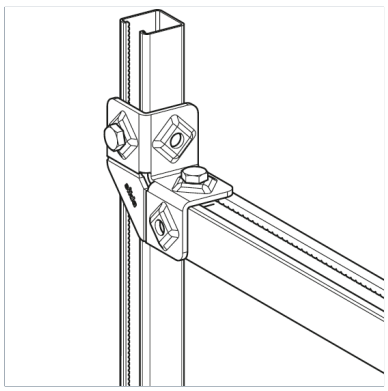

General Information

Connecting element for frame structures with channels of the 41 series. Depending on the application the direction of the channel opening can be freely choosen.

Installation

To be used in pairs.
Torque: 40 Nm

Material Properties

Halogen-free	0
UV-resistant	0

Material

Primary element material	steel
Surface finish	electro galvanized (Fe//Zn)
Corrosion protection class	C2

Forces

Type	-V{X,perm.}	V{X,perm.}	-V{Z,perm.}	V{Z,perm.}
EW 41-1	5.00 kN	5.00 kN	5.00 kN	5.00 kN

Note on loadings

Max. perm. Load as centre load per crossbar fixed with 2 Corner Brackets EW 41-1.

Types

Type	Weight	Quantity	Part number
EW 41-1	0.282 kg/pcs.	25 pcs.	117336

Dimensions

Type	B	d	H	L	t
EW 41-1	45 mm	11 mm	93 mm	93 mm	4 mm

Certification

Corner Bracket EW 41-1

