Tie Rod STR HCP

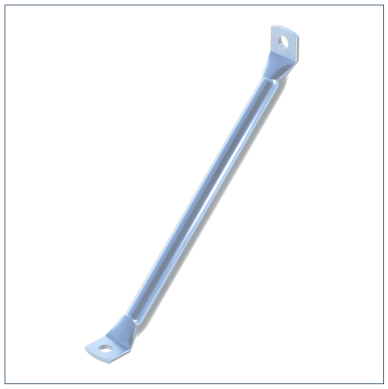





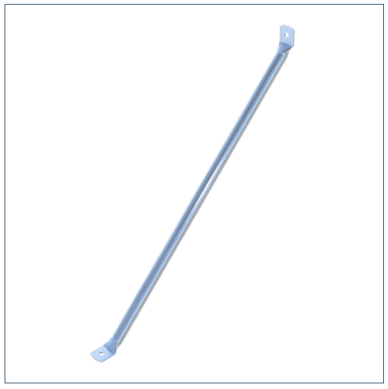

General Information

Tie Rods cater for the lateral forces applied to Support Brackets. Such lateral forces always occur when pipes are laid, in particular when sliding elements are fixed onto Support Brackets, and fett must /fett be safely absorbed by means of Tie Rods fixed to the brackets. Otherwise the Support Brackets run the accute risk of being pulled out of their anchoring components by the forces exerted.

Installation

Fix the Tie Rod to the bore especially made for such purpose at the overhanging leg of the Support Bracket using the recommended hexagon bolt (see table).

Material Properties

Type	Recommended bolt for attachement to Support Bracket	Installation dimension A	Pipe
300/200	M10 x 80	210	1/2"
550/350	M10 x 80	365	1/2"
725/400	M10 x 100	400	3/4"
880/550	M10 x 100	550	3/4"

Halogen-free	0
UV-resistant	0

Material

Primary element material	steel
Surface finish	HCP
Corrosion protection class	C4

Forces

Type	-V{Z,perm.}	V{Z,perm.}
STR 300/200 HCP	7.00 kN	7.00 kN
STR 725/400 HCP	12.00 kN	12.00 kN
STR 880/550 HCP	12.00 kN	12.00 kN

Types

Type	Weight	Quantity	Part number
STR 300/200 HCP	0.319 kg/pcs.	10 pcs.	125967
STR 725/400 HCP	0.906 kg/pcs.	10 pcs.	151908
STR 880/550 HCP	1.306 kg/pcs.	10 pcs.	151892

Tie Rod STR HCP

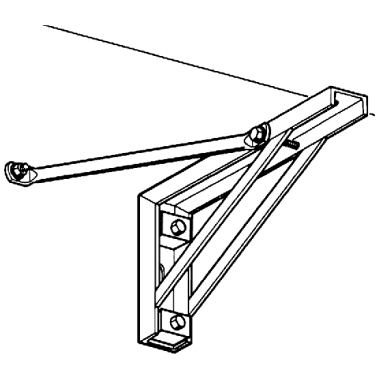

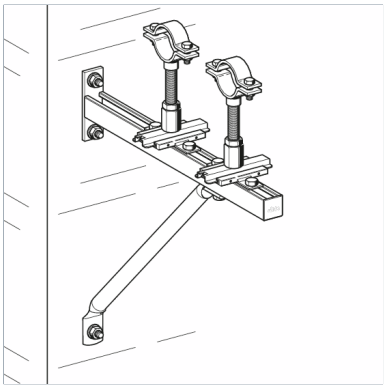

Dimensions

Type	D	d	H	H1	W
STR 300/200 HCP	21.3 mm	11.5 mm	222 mm	210 mm	45°
STR 725/400 HCP	26.9 mm	11.5 mm	420 mm	400 mm	45°
STR 880/550 HCP	26.9 mm	11.5 mm	570 mm	550 mm	45°

Certification