Axial Stop Variable VAS HCP

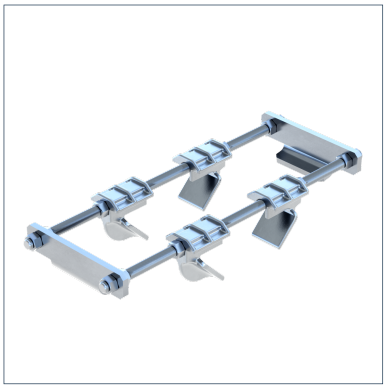

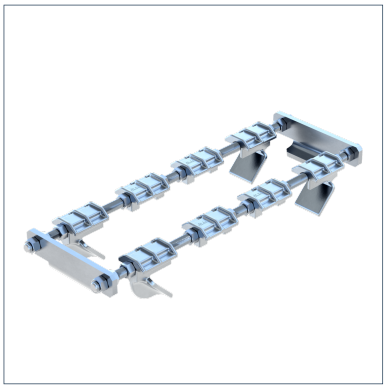

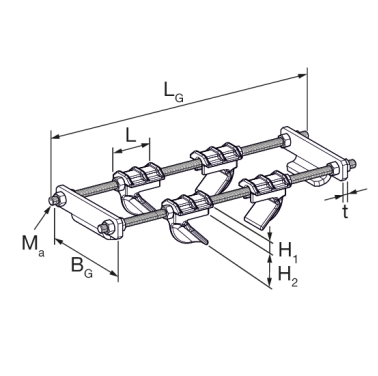

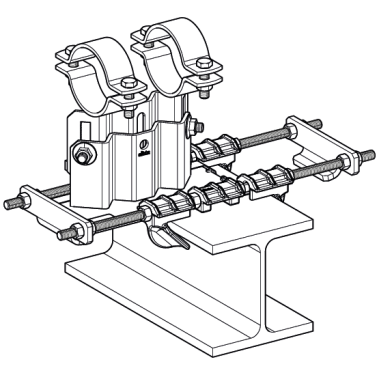

General Information

Modification of siMotec pipe shoes to a double-sided variable axial stop, for use with traditional steel beams. Using the Axial stop, the pipe shoe can move axially through the pipe to a predefined degree of displacement, with restricted limits in both axial directions.

Installation

The specified tightening torques must be observed for the connection to the beam. The 500 mm threaded rods are cut to the required length on site. The required amount of axial movement is adjusted using the supplied nuts, with a maximum displacement of 125 mm, equating to half of the sliding plate Forces in the axial direction can only be achieved if anti-slip devices (e.g. cleats/stoppers) are used properly. These must be provided when designing the pipeline and are the responsibility of the pipeline manufacturer.

Max. Beam flange thickness t ≤ 30 mm

Application:

Type	For flange width [mm]
VAS 80/140	80 - 140
VAS 160/260	141 - 260
VAS 280/300	261 - 300

Tightenning Torque

Flange Thickness [mm]	Beam Width 80 - 220 mm Tightenning Torque [Nm]	Beam Width 221 - 300 mm Tightenning Torque [Nm]
5 - 10	40	15
11 - 20	25	15
21 - 30	20	15

Material Properties

Halogen-free	0
UV-resistant	0

Material

Primary element material	steel cast steel
Surface finish	HCP
Corrosion protection class	C4

Forces

Type	-V{X,perm.}	V{X,perm.}
VAS 80/140 HCP	12.00 kN	12.00 kN
VAS 160/260 HCP	12.00 kN	12.00 kN

Axial Stop Variable VAS HCP

Type	-V{X,perm.}	V{X,perm.}
VAS 280/300 HCP	12.00 kN	12.00 kN

Note on loadings

Load capacities correspond to the values of the fixed point set XS, see documentation in the catalogue. However, maximum axial load is 12 kN per axial stop.

Additional information

Also available with DualShield for high corrosion protection within C5H environments.

Types

Type	Weight	Quantity	Part number
VAS 80/140 HCP	3.390 kg/pcs.	1 pcs.	802796
VAS 160/260 HCP	3.890 kg/pcs.	1 pcs.	802799
VAS 280/300 HCP	4.370 kg/pcs.	1 pcs.	802800

Dimensions

Type	BG	H1	H2	L	LG	Ma	t
VAS 80/140 HCP	172.5 mm	15.3 mm	42 mm	60 mm	500 mm	M12	8 mm
VAS 160/260 HCP	172.5 mm	15.3 mm	42 mm	60 mm	500 mm	M12	8 mm
VAS 280/300 HCP	172.5 mm	15.3 mm	42 mm	60 mm	500 mm	M12	8 mm

Certification