# Pipe Shoe LK-HV 150 HCP

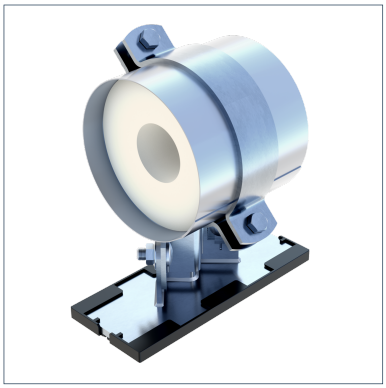

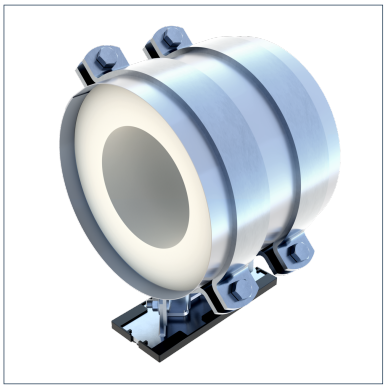

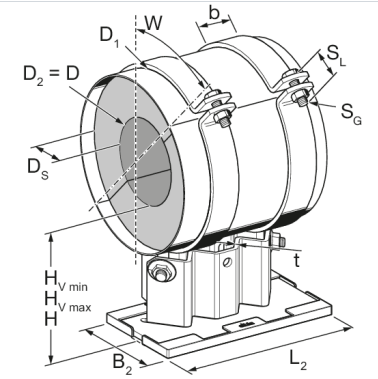


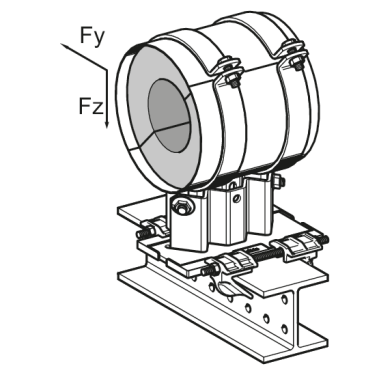


## General Information

Pipe Shoe with insulation. With PUR insulation insert for pipes on suitable surfaces. Height-adjustable in steps of 2.5 mm. When resting on steel beams, a minimum flange width of 80 mm is recommended.

## Installation

| NB | Form | Height H as delivered [mm] | Height H range [mm] |
|---|---|---|---|
| DN 25 - 50 | Single clamp | 150 | 137,5 ... 167,5 |
| DN 65 - 80 | Single clamp | 150 | 147,5 ... 177,5 |
| DN 100 - 250 | Double clamp | 150 | 150 ... 180 |
| DN 300 | Double clamp | 150 | 150 ... 160 |

The laying rules of DIN 4140 have to be respected (existing gaps have to be sealed by means of sealing paste if necessary).

Tightening torque screw connections:

| Clamping bolts | tightening torque [Nm] | height adjustment | tightening torque [Nm] |
|---|---|---|---|
| DN 25 - 80 | 25 | bolts in the bar | 80 |
| DN 100 - 300 | 30 | bolts in the bar | 80 |

## Temperature

| | |
|---|---|
| Max. temperature insulation | 120 °C |
| Min. temperature insulation | -70 °C |
| Max. temperature sliding element | 130 °C |
| Min. temperature sliding element | -20 °C |

## Mechanical Properties

| | |
|---|---|
| Pipe shoe static coefficient of friction u (without sliding plate) - siFramo and siMotec | 0,3 |

## Material Properties

| | |
|---|---|
| Halogen-free | 0 |
| UV-resistant | 0 |

## Material

| | |
|---|---|
| Primary element material | steel |

| | |
|---|---|
| Isolating element material | PUR |
| Sliding element material | PA 6.0 |
| Connecting element material | steel |
| Surface finish | HCP |
| Corrosion protection class | C4 |

### Fire Performance

Class EL according to DIN EN 13501-1

### Additional information

Also available with DualShield for high corrosion protection within C5H environments. Minimum quantities must be observed for pipe shoes outside the DN range. In addition, delivery times apply for these items on request.

### Types

| Type | Size min. | Size max. | DN | Weight | Quantity | Part number |
|---|---|---|---|---|---|---|
| LK-HV 150 DN 25 (1'') HCP | 30.00 mm | 34.00 mm | DN 25 (1") | 4.180 kg/ pcs. | 1 pcs. | 110110 |
| LK-HV 150 DN 32 (1 1/4'') HCP | 40.00 mm | 44.00 mm | DN 32 (1 1/4") | 4.230 kg/ pcs. | 1 pcs. | 110111 |
| LK-HV 150 DN 40 (1 1/2") HCP | 45.00 mm | 49.00 mm | DN 40 (1 1/2") | 4.270 kg/ pcs. | 1 pcs. | 110112 |
| LK-HV 150 DN 50 (2'') HCP | 57.00 mm | 61.00 mm | DN 50 (2") | 4.400 kg/ pcs. | 1 pcs. | 110113 |
| LK-HV 150 DN 65 (2 1/2'') HCP | 72.00 mm | 77.00 mm | DN 65 (2 1/2") | 6.200 kg/ pcs. | 1 pcs. | 110114 |
| LK-HV 150 DN 80 (3'') HCP | 84.00 mm | 89.00 mm | DN 80 (3") | 6.600 kg/ pcs. | 1 pcs. | 110115 |
| LK-HV 150 DN 100 (4'') HCP | 109.00 mm | 115.00 mm | DN 100 (4") | 12.000 kg/ pcs. | 1 pcs. | 110116 |
| LK-HV 150 DN 125 (5'') HCP | 134.00 mm | 140.00 mm | DN 125 (5") | 13.900 kg/ pcs. | 1 pcs. | 110117 |
| LK-HV 150 DN 150 (6'') HCP | 163.00 mm | 169.00 mm | DN 150 (6") | 14.500 kg/ pcs. | 1 pcs. | 110118 |
| LK-HV 150 DN 200 (8'') HCP | 215.00 mm | 221.00 mm | DN 200 (8") | 16.600 kg/ pcs. | 1 pcs. | 110119 |
| LK-HV 150 DN 250 (10'') HCP | 266.00 mm | 273.00 mm | DN 250 (10") | 18.600 kg/ pcs. | 1 pcs. | 110120 |
| LK-HV 150 DN 300 (12'') HCP | 317.00 mm | 324.00 mm | DN 300 (12") | 24.200 kg/ pcs. | 1 pcs. | 110121 |

# Pipe Shoe LK-HV 150 HCP

### Dimensions

| Type | b | B2 | D | D1 | D2 | DS | H | HV min | HV max | L2 | SG | SL | t | W |
|---|---|---|---|---|---|---|---|---|---|---|---|---|---|---|
| LK-HV 150 DN 25 (1'') HCP | 50 mm | 105 mm | 33.7 mm | 140 mm | 33.7 mm | 50 mm | 150 mm | 137.5 mm | 167.5 mm | 255.6 mm | M12 | 50 mm | 5 mm | 45° |
| LK-HV 150 DN 32 (1 1/4'') HCP | 50 mm | 105 mm | 42.4 mm | 146 mm | 42.4 mm | 50 mm | 150 mm | 137.5 mm | 167.5 mm | 255.6 mm | M12 | 50 mm | 5 mm | 45° |
| LK-HV 150 DN 40 (1 1/2") HCP | 50 mm | 105 mm | 48.3 mm | 152 mm | 48.3 mm | 50 mm | 150 mm | 137.5 mm | 167.5 mm | 255.6 mm | M12 | 50 mm | 5 mm | 45° |
| LK-HV 150 DN 50 (2'') HCP | 50 mm | 105 mm | 60.3 mm | 163 mm | 60.3 mm | 50 mm | 150 mm | 137.5 mm | 167.5 mm | 255.6 mm | M12 | 50 mm | 5 mm | 45° |
| LK-HV 150 DN 65 (2 1/2'') HCP | 50 mm | 105 mm | 76.1 mm | 200 mm | 76.1 mm | 60 mm | 150 mm | 147.5 mm | 177.5 mm | 255.6 mm | M12 | 55 mm | 5 mm | 45° |
| LK-HV 150 DN 80 (3'') HCP | 50 mm | 105 mm | 88.9 mm | 214 mm | 88.9 mm | 60 mm | 150 mm | 147.5 mm | 177.5 mm | 255.6 mm | M12 | 55 mm | 5 mm | 45° |
| LK-HV 150 DN 100 (4'') HCP | 50 mm | 105 mm | 114.3 mm | 237 mm | 114.3 mm | 60 mm | 150 mm | 150 mm | 180 mm | 255.6 mm | M12 | 55 mm | 5 mm | 45° |
| LK-HV 150 DN 125 (5'') HCP | 50 mm | 105 mm | 139.7 mm | 262 mm | 139.7 mm | 60 mm | 150 mm | 150 mm | 180 mm | 255.6 mm | M12 | 55 mm | 5 mm | 45° |
| LK-HV 150 DN 150 (6'') HCP | 60 mm | 105 mm | 168.3 mm | 291 mm | 168.3 mm | 60 mm | 150 mm | 150 mm | 180 mm | 255.6 mm | M16 | 60 mm | 5 mm | 45° |
| LK-HV 150 DN 200 (8'') HCP | 60 mm | 105 mm | 219.1 mm | 342 mm | 219.1 mm | 60 mm | 150 mm | 150 mm | 180 mm | 255.6 mm | M16 | 60 mm | 5 mm | 45° |
| LK-HV 150 DN 250 (10'') HCP | 60 mm | 105 mm | 273 mm | 396 mm | 273 mm | 60 mm | 150 mm | 150 mm | 180 mm | 255.6 mm | M16 | 60 mm | 5 mm | 45° |
| LK-HV 150 DN 300 (12'') HCP | 70 mm | 105 mm | 323.9 mm | 487 mm | 323.9 mm | 80 mm | 150 mm | 150 mm | 160 mm | 255.6 mm | M16 | 65 mm | 5 mm | 45° |

# Pipe Shoe LK-HV 150 HCP

## Certification

## Documents

Sikla Pipe Supports - Comprehensive Solutions for Secure and Efficient Installations

Load Capacities for Insulated and Hanging Supports - Sikla Technical Data