Pipe Shoe LD-HV 150 HCP

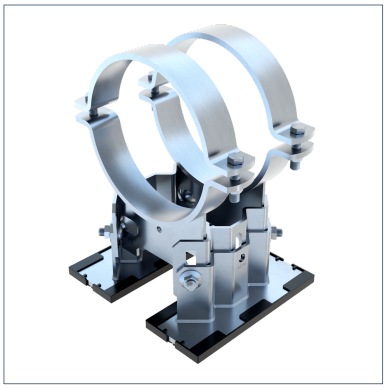

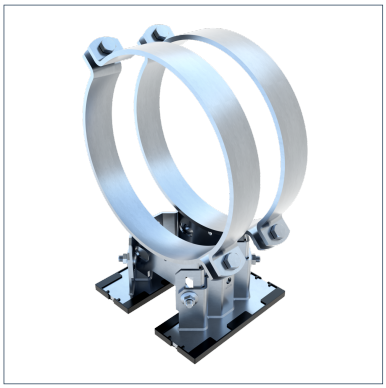

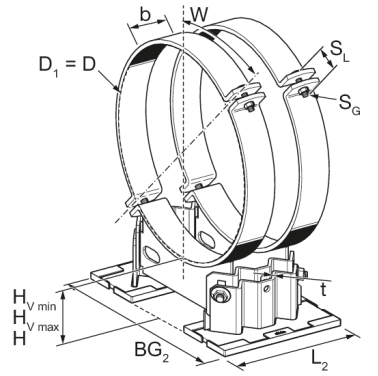

General Information

Height-adjustable, double-clamp pipe shoe with two bars and a delivery height of 150 mm. Height adjustment in steps of 2.5 mm. When resting on steel beams, a minimum flange width of 80 mm is recommended. Guide or fixed points can also be created by combining with other Sikla components.

Installation

To guarantee that both sliding plates rest correctly, both webs must be adjusted to exactly the same height.

Type	Height H as delivered [mm]	Height H Range [mm]
HV 150	150	116 - 168,5

Tightening torque screw connections

Clamping bolts	Tightening torque [Nm]	Height adjustment	Tightening torque [Nm]
DN 200	50	Bolts in the bar	80
DN 250 - 600	60	Bolts in the bar	80

Temperature

Max. temperature	300 °C
Min. temperature	-20 °C
Max. temperature sliding element	130 °C
Min. temperature sliding element	-20 °C

Mechanical Properties

Pipe shoe static coefficient of friction u (without sliding plate) - siFramo and siMotec	0,3

Material Properties

Halogen-free	0
UV-resistant	0

Material

Primary element material	steel
Sliding element material	PA 6.0
Surface finish	HCP

Corrosion protection class	C4

Additional information

Also available with DualShield for high corrosion protection within C5H environments. Minimum quantities must be observed for pipe shoes outside the DN range. In addition, delivery times apply for these items on request.

Types

Type	Size min.	Size max.	DN	Weight	Quantity	Part number
LD-HV 150 215-221 (DN 200) HCP	215.00 mm	221.00 mm		13.240 kg/ pcs.	1 pcs.	112401
LD-HV 150 266-273 (DN 250) HCP	266.00 mm	273.00 mm		15.920 kg/ pcs.	1 pcs.	112402
LD-HV 150 310-317	310.00 mm	317.00 mm		16.877 kg/ pcs.	1 pcs.	801880
LD-HV 150 317-324 (DN 300) HCP	317.00 mm	324.00 mm		17.000 kg/ pcs.	1 pcs.	112403
LD-HV 150 349-356 (DN 350) HCP	349.00 mm	356.00 mm	DN 350 (14")	18.100 kg/ pcs.	1 pcs.	110102
LD-HV 150 397-407 (DN 400) HCP	397.00 mm	407.00 mm	DN 400 (16")	20.400 kg/ pcs.	1 pcs.	110103
LD-HV 150 498-508 (DN 500) HCP	498.00 mm	508.00 mm	DN 500 (20")	24.100 kg/ pcs.	1 pcs.	110104
LD-HV 150 600-610 (DN 600) HCP	600.00 mm	610.00 mm	DN 600 (24")	26.400 kg/ pcs.	1 pcs.	110105

Dimensions

Type	b	BG2	D	D1	H	HV min	HV max	L2	SG	SL	t	W
LD-HV 150 215-221 (DN 200) HCP	50 mm	285 mm	221 mm	221 mm	150 mm	116 mm	168.5 mm	255.6 mm	M12	55 mm	5 mm	90°
LD-HV 150 266-273 (DN 250) HCP	50 mm	285 mm	273 mm	273 mm	150 mm	116 mm	168.5 mm	255.6 mm	M12	55 mm	5 mm	90°
LD-HV 150 310-317	60 mm	285 mm	317 mm	317 mm	150 mm	116 mm	168.5 mm	255.6 mm	M16	60 mm	5 mm	90°
LD-HV 150 317-324 (DN 300) HCP	60 mm	285 mm	324 mm	324 mm	150 mm	116 mm	168.5 mm	255.6 mm	M16	60 mm	5 mm	45°

Pipe Shoe LD-HV 150 HCP

Type	b	BG2	D	D1	H	HV min	HV max	L2	SG	SL	t	W
LD-HV 150 349-356 (DN 350) HCP	60 mm	325 mm	356 mm	356 mm	150 mm	116 mm	168.5 mm	255.6 mm	M16	60 mm	5 mm	45°
LD-HV 150 397-407 (DN 400) HCP	70 mm	325 mm	407 mm	407 mm	150 mm	116 mm	168.5 mm	255.6 mm	M16	65 mm	5 mm	45°
LD-HV 150 498-508 (DN 500) HCP	70 mm	325 mm	508 mm	508 mm	150 mm	116 mm	168.5 mm	255.6 mm	M16	65 mm	5 mm	45°
LD-HV 150 600-610 (DN 600) HCP	70 mm	325 mm	610 mm	610 mm	150 mm	116 mm	168.5 mm	255.6 mm	M16	65 mm	5 mm	45°

Certification

Documents

Sikla Pipe Supports - Comprehensive Solutions for Secure and Efficient Installations

Load Capacities for Pipe Supports LD HV - Sikla Technical Data