Threaded Clevis GWB HCP



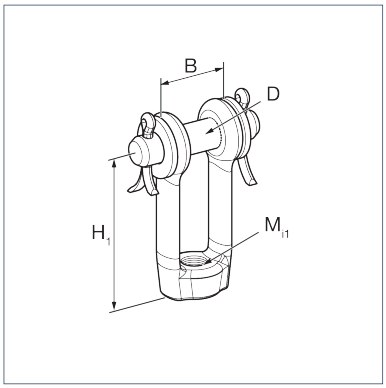

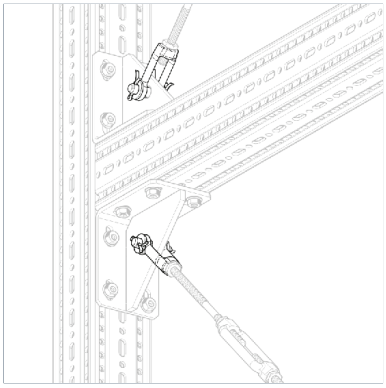

General Information

Threaded Clevis for construction of bracings and wind bracings e.g. in the system siFramo as tie rod to transfer loads/influences.

Installation

The connection to the Threaded Clevis is made on one side with the tie rod or threaded rod and on the other side with the Corner Bracket WD or an eye screw.

Material Properties

Halogen-free	0
UV-resistant	0

Material

Primary element material	steel
Surface finish	HCP
Corrosion protection class	C4

Forces

Type	-V{Z,perm.}
GWB M10 HCP	13.60 kN
GWB M12 HCP	21.40 kN
GWB M16 HCP	45.30 kN

Types

Type	Weight	Quantity	Part number
GWB M10 HCP	0.108 kg/pcs.	10 pcs.	113053
GWB M12 HCP	0.240 kg/pcs.	10 pcs.	113054
GWB M16 HCP	0.474 kg/pcs.	10 pcs.	113055

Dimensions

Type	B	D	H1	Mi1
GWB M10 HCP	26 mm	10 mm	52.5 mm	M10
GWB M12 HCP	34.5 mm	12 mm	70.5 mm	M12
GWB M16 HCP	44.5 mm	16 mm	80 mm	M16

Certification