Grooved Pin PNS

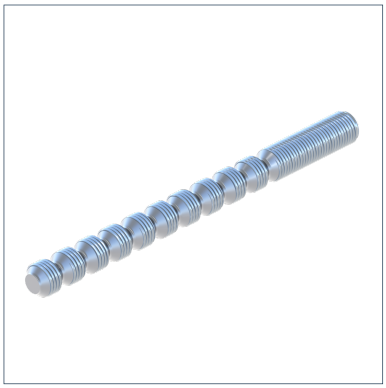

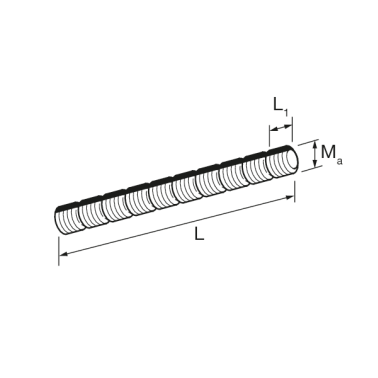

General Information

In conjunction with the Pressix CC quick-assembly systems or individually usable threaded pins with grooves, which eliminate time-consuming cutting tasks (sawing and re-cutting the threads). The grooved pin is cut in a groove using the PBC bolt cutter without damaging the thread.

Installation

Type	permissible tightening torque [kN]
M8	10
M10	15

Material Properties

Halogen-free	0
UV-resistant	0

Material

Primary element material	steel
Surface finish	electro galvanized (Fe//Zn)
Corrosion protection class	C2

Forces

Type	-V{Z,perm.}
GES PNS M 8 1M	3.30 kN
GES PNS M10 1M	4.50 kN

Types

Type	L	Weight	Quantity	Part number
GES PNS M 8 1M	1000 mm	0.281 kg/pcs.	1 pcs.	157755
GES PNS M10 1M	1000 mm	0.500 kg/pcs.	1 pcs.	157773

Dimensions

Type	L	L1	Ma
GES PNS M 8 1M	1000 mm	10 mm	M 8
GES PNS M10 1M	1000 mm	10 mm	M10

Certification