Nail Anchor AN N

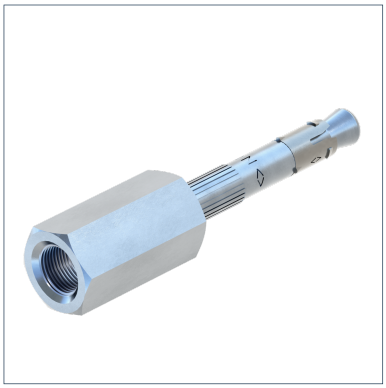

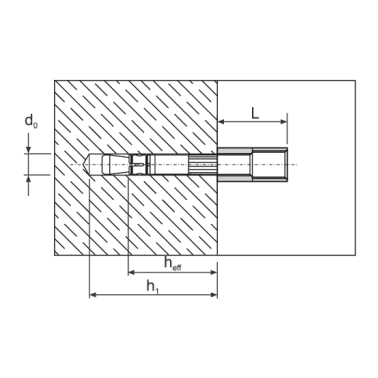

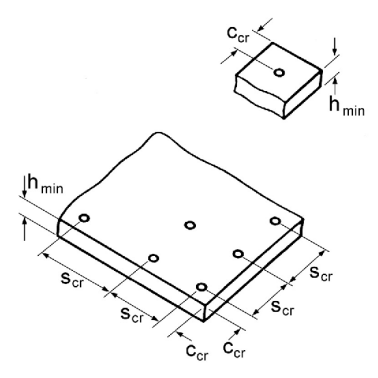

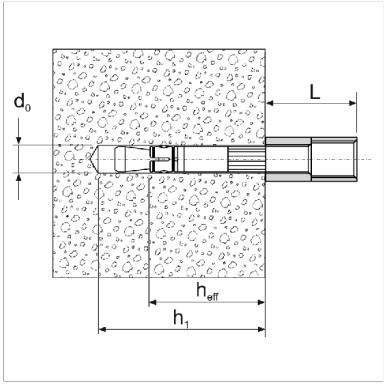

General Information

Suitable for the quick and easy mounting of components to a concrete soffit or shear wall. The internal dual thread M8/M10 allows for a direct easy connection with the Nail Anchor (e.g. M&E service supports). The reduced drilling depth of 35 mm and the bore dia. of 6 mm minimise the risk of hitting a rebar during installation and reduces the overall cost of drilling.

Installation

Fast and simple setting of the Nail Anchor AN N M8/M10:
1. Drilling
2. Cleaning of bore hole
3. Hammer in - ready!

Material Properties

Halogen-free	0
UV-resistant	0

Material

Primary element material	steel
Surface finish	electro galvanized (Fe//Zn)
Corrosion protection class	C2

Fire resistance

Type	Fire Resistance 30 min	Fire Resistance 60 min	Fire Resistance 90 min	Fire Resistance 120 min
AN N 6X25 M8/M10	0.6 kN	0.6 kN	0.6 kN	0.5 kN
AN N 6X30 M8/M10	0.8 kN	0.7 kN	0.6 kN	0.6 kN

Types

Type	L	Weight	Quantity	Part number
AN N 6X25 M8/M10	25.00 mm	0.027 kg/pcs.	100 pcs.	112152
AN N 6X30 M8/M10	25.00 mm	0.027 kg/pcs.	100 pcs.	117561

Certification

Europäische Technische Zulassung - nach ETAG001-06
ETA-13/0048

Sikla approval ETA-13/0048
For the multiple use for non-structural applications in concrete (min. C12/15 and max. C50/60). Fire protection testing, VdS-conform

Documents

Sikla Metal Anchor Systems

Nail Anchor AN N - Technical Data