Hexagon Drilling Screw SKB 46

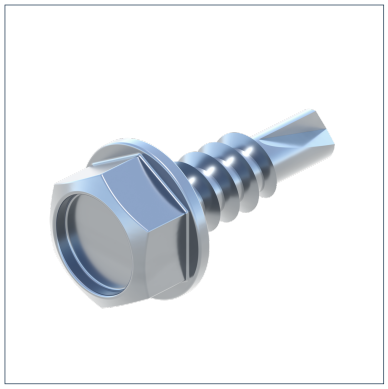

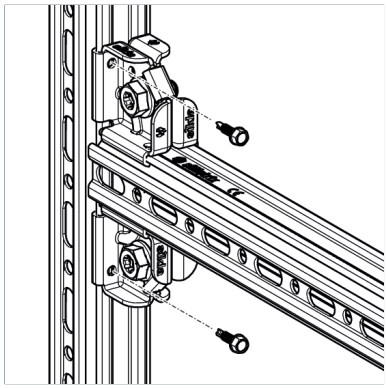

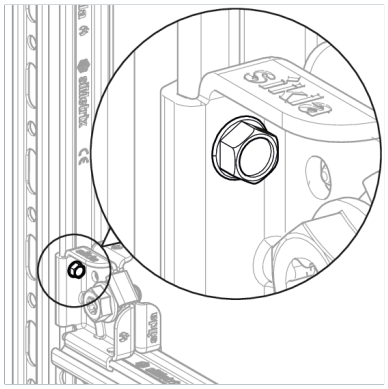

Material Properties

Halogen-free	0
UV-resistant	0

Material

Primary element material	steel
Surface finish	HCP
Corrosion protection class	C4

Types

Type	Weight	Quantity	Part number
SKB ST 5,5 x 16 ISO 15480 HCP	0.010 kg/pcs.	1 pcs.	803769

Certification