Lateral Brace CFB 46 HCP

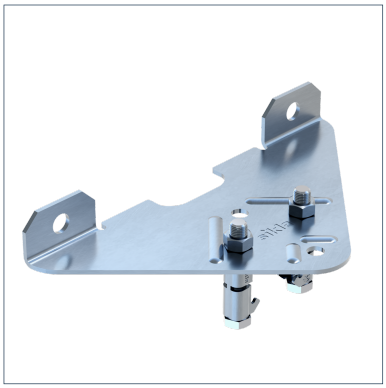

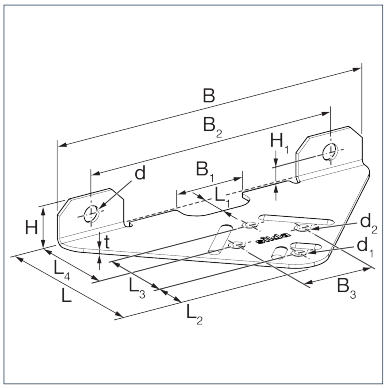

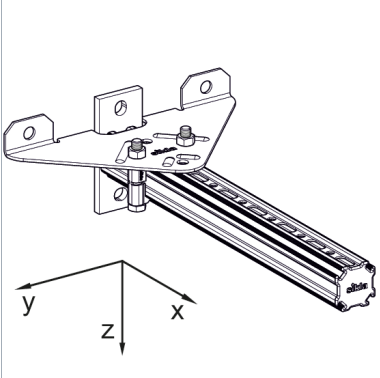

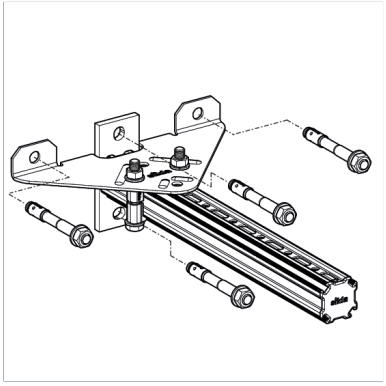

Material Properties

Halogen-free	0
UV-resistant	0

Material

Primary element material	steel
Surface finish	HCP
Corrosion protection class	C4

Forces

Type	V{Y,perm.}
CFB 46 HCP	5.31 kN

Moments

Type	M{Z,perm.}
CFB 46 HCP	0.9 kNm

Types

Type	Weight	Quantity	Part number
CFB 46 HCP	0.570 kg/pcs.	10 pcs.	803640

Dimensions

Type	B	B1	B2	B3	d	d1	d2	H	H1	L	L1	L2	L3	L4	t
CFB 46 HCP	260 mm	56 mm	205 mm	56.5 mm	13 mm	11 mm	12 mm	33 mm	15 mm	135 mm	18 mm	20 mm	62.5 mm	78 mm	3 mm

Certification

Stahl

epd-global
Powered by EPD-Norway