Profile Holder MPH PRO 46- 41 HCP

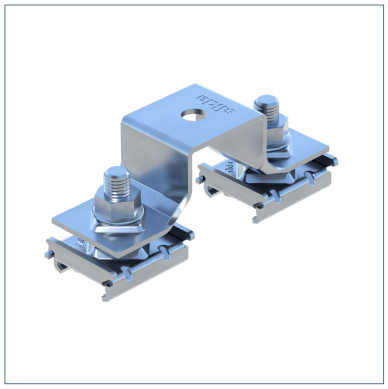

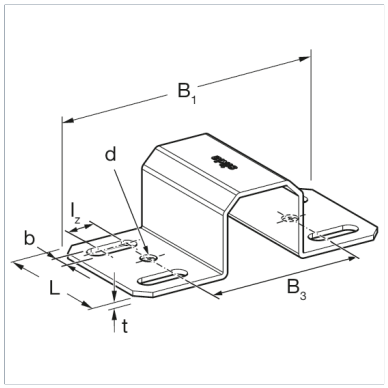

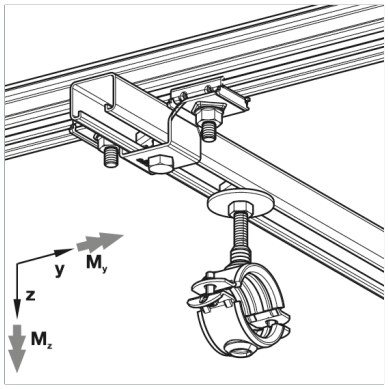

General Information

Implementation of a cross-connection between the siMetrix PRO 46 profile and the Sikla Channel with a rail width of 41 mm.

Installation

The cross connection of the Channel MS 41 to the Profile PRO 46 is made on both sides with the block PBH 46.

Material Properties

Halogen-free	0
UV-resistant	0

Material

Primary element material	steel
Surface finish	HCP
Corrosion protection class	C4

Forces

Type	-V{X,perm.}	V{X,perm.}	-V{Y,perm.}	V{Y,perm.}	-V{Z,perm.}	V{Z,perm.}
MPH PRO 46 - 41 HCP	0.27 kN	0.27 kN	0.78 kN	0.78 kN	5.72 kN	5.72 kN

Moments

Type	-M{Y,perm.}	M{Y,perm.}	-M{Z,perm.}	M{Z,perm.}
MPH PRO 46 - 41 HCP	0.06 kNm	0.06 kNm	0.22 kNm	0.22 kNm

Types

Type	Weight	Quantity	Part number
MPH PRO 46 - 41 HCP	0.390 kg/pcs.	10 pcs.	803866

Dimensions

Type	B1	B3	d	L	t
MPH PRO 46 - 41 HCP	127 mm	89 mm	12 mm	40 mm	2.5 mm

Certification

Documents

DoP (EN) - MPH 46