Profile Holder MPH PRO 46- 46 HCP

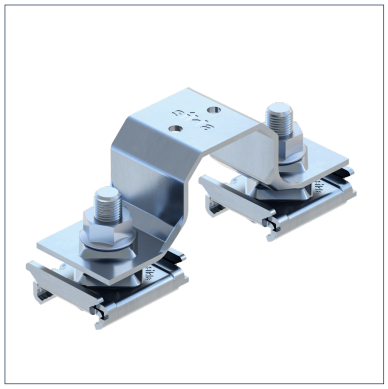

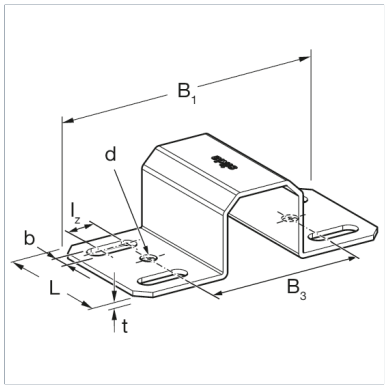

General Information

Implementation of a cross-connection between the siMetrix PRO 46 profile and another siMetrix PRO 46 profile.

Material Properties

Halogen-free	0
UV-resistant	0

Material

Primary element material	steel
Surface finish	HCP
Corrosion protection class	C4

Forces

Type	-V{X,perm.}	V{X,perm.}	-V{Y,perm.}	V{Y,perm.}	-V{Z,perm.}	V{Z,perm.}
MPH PRO 46 - 46 HCP	0.27 kN	0.27 kN	0.78 kN	0.78 kN	5.72 kN	5.72 kN

Moments

Type	-M{Y,perm.}	M{Y,perm.}	-M{Z,perm.}	M{Z,perm.}
MPH PRO 46 - 46 HCP	0.06 kNm	0.06 kNm	0.22 kNm	0.22 kNm

Types

Type	Weight	Quantity	Part number
MPH PRO 46 - 46 HCP	0.390 kg/pcs.	10 pcs.	807302

Dimensions

Type	B1	B3	d	L	t
MPH PRO 46 - 46 HCP	132 mm	94 mm	12 mm	40 mm	2.5 mm

Certification

Stahl

Profile Holder MPH PRO 46- 46 HCP

Documents

DoP (EN) - MPH 46