Insulated Foot Plate SHB SQF 46

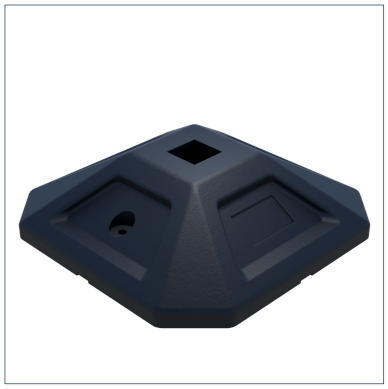

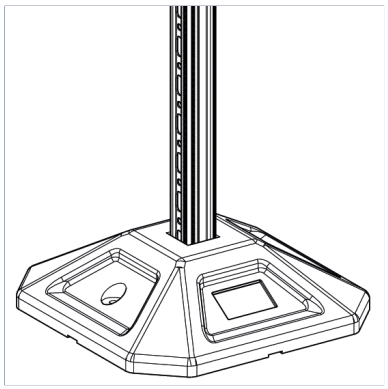

General Information

Integrated foot plate made of synthetic rubber. Providing a non-penetrative supporting base for low level siMetrix 46 structures. Suitable for equipment, pipes, ventilation ducts or walkways.

Installation

Insert the Profile PRO 46 into the Insulated Foot's slot. No fixing required.

Type SQF 350: 60 mm
Type SQF 500: 90 mm
Tests to determine the coefficient of friction shall be carried out by the customer. Depending on the used roofing film the customer has to decide if an additional separation layer (e.g. fleece) is necessary. Furthermore the statics have to be verified by a qualified engineer.

Material Properties

Halogen-free	0
UV-resistant	0

Material

Primary element material	SBR
Corrosion protection class	C4

Forces

Type	V{Z,perm.}
SHB SQF 46 - 350	9.00 kN
SHB SQF 46 - 500	16.00 kN

Types

Type	Weight	Quantity	Part number
SHB SQF 46 - 350	5.000 kg/pcs.	1 pcs.	803651
SHB SQF 46 - 500	13.500 kg/pcs.	1 pcs.	803652

Dimensions

Type	B	H	H1	L
SHB SQF 46 - 350	350 mm	100 mm	60 mm	350 mm
SHB SQF 46 - 500	500 mm	130 mm	90 mm	500 mm

Certification

epd-global
Powered by EPD-Norway