Pivot Joint GE F - ST F100/160 HCP

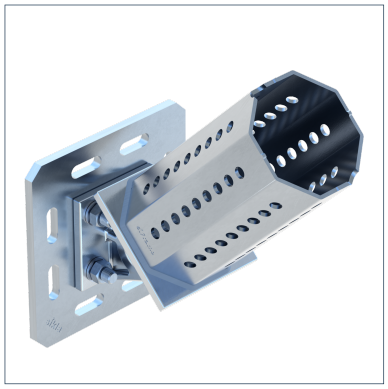

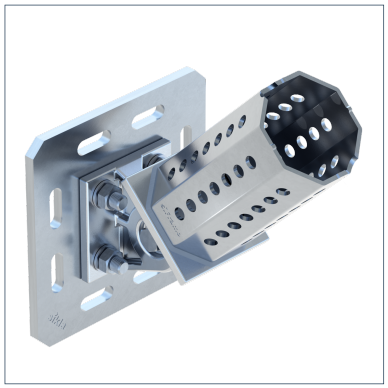

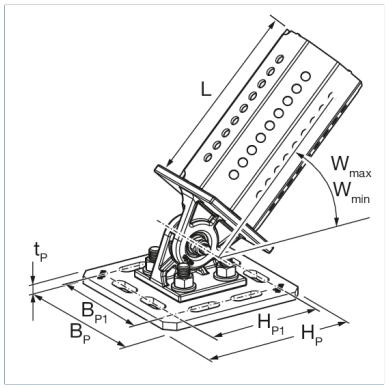

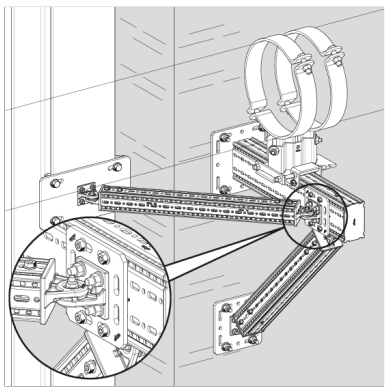

General Information

For supporting single-arm cantilevers in conjunction with the siFramo 100/160 support system and for bracing frame structures.
The angle α can be continuously varied between 25° and 155°.

Material Properties

Halogen-free	0
UV-resistant	0

Material

Primary element material	steel
Surface finish	HCP
Corrosion protection class	C4

Forces

Type	-V{X,Rd}	V{X,Rd}
GE F100/160-F 80 HCP	13.7 kN	13.7 kN
GE F100/160-F100 HCP	16.5 kN	16.5 kN

Note on loadings

The specified load values are design loads Rd and include a partial safety factor γM2 = 1.25 (DIN EN 1993-1-8:2025-04, Table 4.1)
A partial safety factor of γG = 1.35 (DIN EN 1990:2021-10, Table A1.2(B)) must be taken into account for permanent loads.

Additional information

Also available with DualShield for high corrosion protection within C5H environments.

Types

Type	Weight	Quantity	Part number
GE F100/160-F 80 HCP	3.610 kg/pcs.	1 pcs.	115854
GE F100/160-F100 HCP	4.280 kg/pcs.	1 pcs.	115855

Dimensions

Type	BP	BP1	HP	HP1	L	tP	Wmin	Wmax
GE F100/160-F 80 HCP	160 mm	122 mm	160 mm	122 mm	140 mm	8 mm	25°	155°
GE F100/160-F100 HCP	160 mm	122 mm	160 mm	122 mm	180 mm	8 mm	25°	155°

Pivot Joint GE F - ST F100/160 HCP

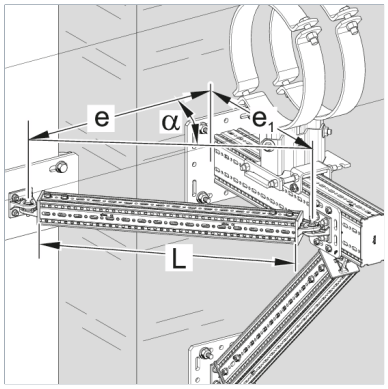

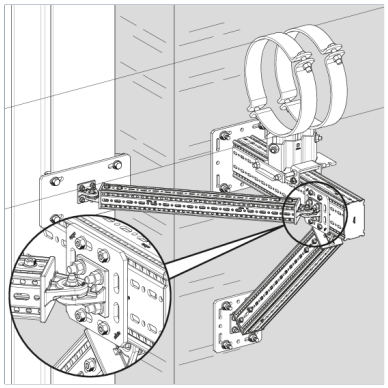

Certification