Grid Fixation FBT HCP

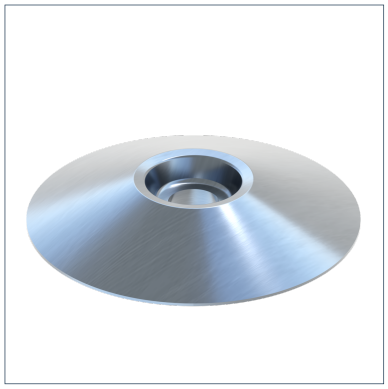

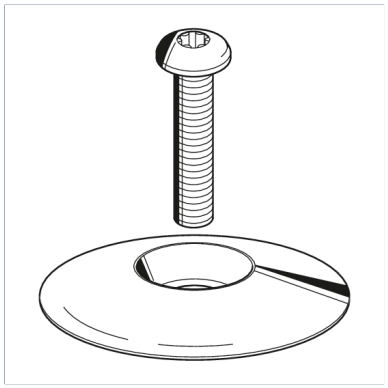

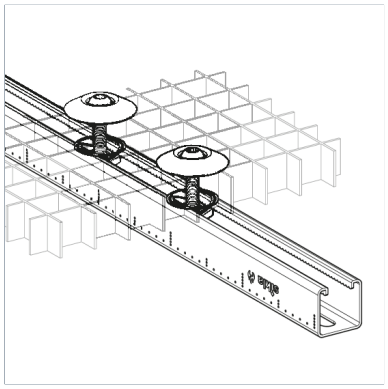

General Information

Floor plates for professional fastening of gratings on walkways, work platforms, pedestals, or similar applications. Designed for gratings with a mesh size of at least 10 x 10 mm to a maximum of 40 x 40 mm.

Installation

Place four floor plates in the corners of each grating and connect them to the substructure. Observe the relevant guidelines and installation instructions.

Filling rod width: at least 10 mm
Support bar width: up to approx. 40 mm

Material Properties

Halogen-free	0
UV-resistant	0

Material

Primary element material	steel
Surface finish	HCP
Corrosion protection class	C4

Types

Type	Weight	Quantity	Part number
FBT 10,3 MM HCP	0.031 kg/pcs.	50 pcs.	116816

Dimensions

Type	b	D	H
FBT 10,3 MM HCP	10.3 mm	55 mm	7 mm

Certification

Stahl