Guiding Bracket FW F100 - Z HCP

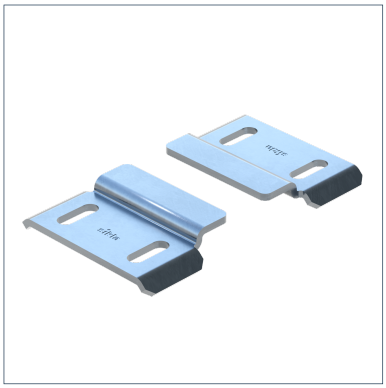

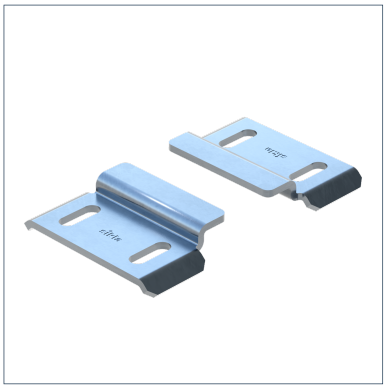

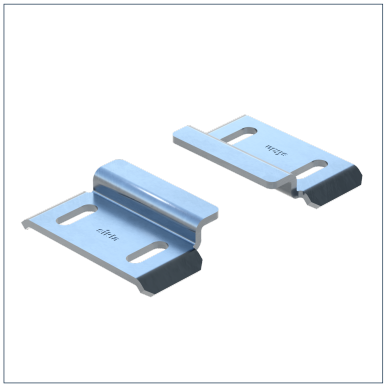

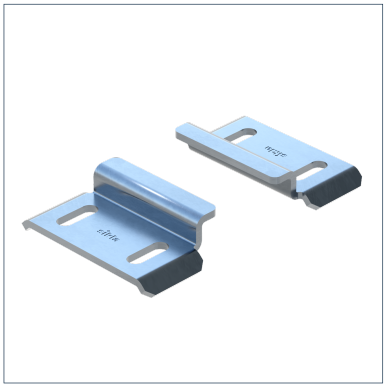

General Information

Using the Guiding Bracket FW F it's possible to guide Pipe Shoes with different plate thicknesses on siFramo F100 beam sections. The different versions of Type Z are suitable for the respective specified maximum plate thickness (t)and so additionally allow the absorption of lifting forces.

Installation

Installation on top of Beam Section TP F 100 with 2 Self Forming Screws FLS F per Guiding Bracket, i.e. per set 4 Self Forming Screws have to be used altogether. You can find the Self Forming Screw in the siFramo chapters.
For Type Z exists a clearance of 3 mm in the vertical z-axis. Please ensure a clearance of 3 mm in the vertical y-axis for all types.

Material Properties

Halogen-free	0
UV-resistant	0

Material

Primary element material	steel
Surface finish	HCP
Corrosion protection class	C4

Forces

Type	V{Y,perm.}	-V{Z,perm.}
FW-Z F100- 6 HCP	1.90 kN	6.40 kN
FW-Z F100- 9 HCP	1.90 kN	6.40 kN
FW-Z F100-12 HCP	1.90 kN	6.40 kN
FW-Z F100-15 HCP	1.90 kN	6.40 kN

Moments

Type	M{X,perm.}
FW-Z F100- 6 HCP	0.4 kNm
FW-Z F100- 9 HCP	0.4 kNm
FW-Z F100-12 HCP	0.4 kNm
FW-Z F100-15 HCP	0.4 kNm

Note on loadings

The torque is calculated by M = F(y) x h, whereas the perm. load for F(y) may not be exceeded. Dimension h refers from the middle of the pipe to the top of the base plate.
The perm. loads have been determined by load tests following DIN EN 13480-3 annex J.
The used Pipe Shoe has to be verified separately.

Guiding Bracket FW F100 - Z HCP

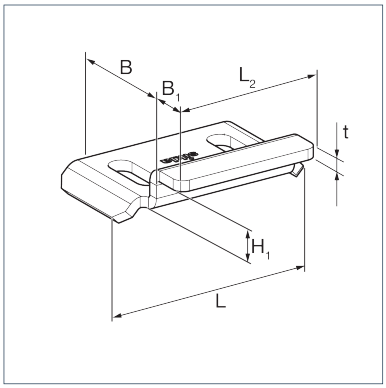

Additional information

Also available with DualShield for high corrosion protection within C5H environments.
Variant Z 12 is suitable for sikla pipe shoes

Types

Type	Weight	Quantity	Part number
FW-Z F100- 6 HCP	0.628 kg/Set	25 Set	113632
FW-Z F100- 9 HCP	0.629 kg/Set	25 Set	113633
FW-Z F100-12 HCP	0.630 kg/Set	25 Set	113634
FW-Z F100-15 HCP	0.643 kg/Set	25 Set	113976

Dimensions

Type	B	B1	L	L2	H1	t
FW-Z F100- 6 HCP	56.5 mm	23.6 mm	116 mm	90 mm	9 mm	5 mm
FW-Z F100- 9 HCP	56.5 mm	20.6 mm	116 mm	90 mm	12 mm	5 mm
FW-Z F100-12 HCP	56.5 mm	17.6 mm	116 mm	90 mm	15 mm	5 mm
FW-Z F100-15 HCP	56.5 mm	14.6 mm	116 mm	90 mm	18 mm	5 mm

Certification

Stahl