Fixed Point Bracket XW F100 HCP

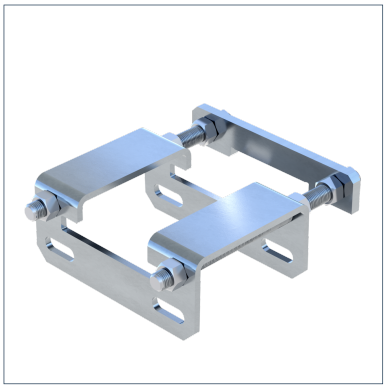

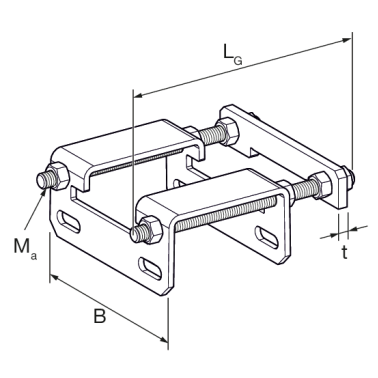

General Information

Element for modification of Sliding Pipe Shoes to Fixed Point Pipe Shoes on siFramo TP F 100 beam sections.

Installation

The slide plate of the Pipe Shoe is disassembled. Connection to Beam Sections TP F 100 and 100/160 means of 4 Self-Forming Screws FLS F.

Axial fixed point forces can only be attained by the professional use of anti-slip protections (e.g. cleats, stoppers). Those have to be planned during the design of the piping and are on the responsibilty of the piping manufacturer.

Material Properties

Halogen-free	0
UV-resistant	0

Material

Primary element material	steel
Surface finish	HCP
Corrosion protection class	C4

Additional information

Also available with DualShield for high corrosion protection within C5H environments.

Types

Type	Weight	Quantity	Part number
XW F100 HCP	1.560 kg/pcs.	1 pcs.	113087

Dimensions

Type	B	LG	Ma	t
XW F100 HCP	160 mm	200 mm	M12	8 mm

Certification