Assembly Group BG49 F100-1/2'' HCP

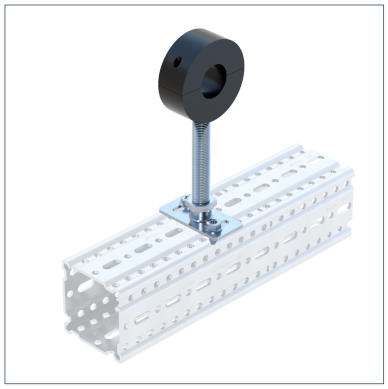

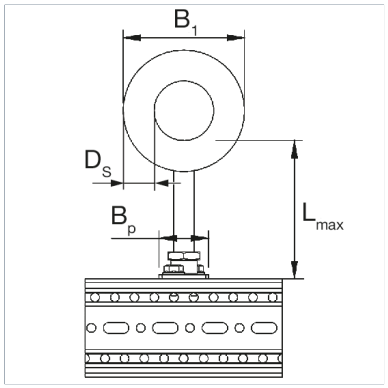

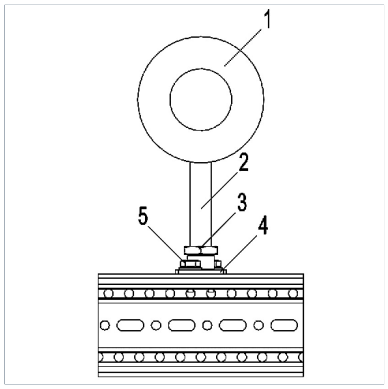

General Information

An Assembly Group containing components to make up a permanent pipe connection with the insulated Chilled Water Clamp RB for chiller plants and cool water systems. The Assembly Group is designed for use with the Beam Section TP F 100. It is connected using Self Forming Screw FLS F, and the height is adjusted via the Threaded Tube 1/2'.

Installation

The assembly of the individual components to form an Assembly Group is carried out during the course of pipe installation on the construction site.

Temperature

Max. temperature	105 °C
Min. temperature	-50 °C

Thermal Conductivity

Thermal conductivity λ {0°C}	λ 0,045 W/Mk

Material Properties

Halogen-free	0
UV-resistant	0
Water vapour diffusion resistance factor	μ 1200

Material

Primary element material	steel
Isolating element material	PUR
Connecting element material	steel
Surface finish	HCP
Corrosion protection class	C4

Fire Performance

Class B2 according to DIN 4102

Types

Type	DN	Weight	Quantity	Part number
BG49 F100-1/2'' DN 15 HCP	DN 15 (1/2")	0.770 kg/pcs.	1 pcs.	113860
BG49 F100-1/2'' DN 20 HCP	DN 20 (3/4")	0.770 kg/pcs.	1 pcs.	113861
BG49 F100-1/2'' DN 25 HCP	DN 25 (1")	0.780 kg/pcs.	1 pcs.	113862
BG49 F100-1/2'' DN 32 HCP	DN 32 (1 1/4")	0.790 kg/pcs.	1 pcs.	113863

Assembly Group BG49 F100-1/2'' HCP

Type	DN	Weight	Quantity	Part number
BG49 F100-1/2'' DN 40 HCP	DN 40 (1 1/2")	0.790 kg/pcs.	1 pcs.	113864
BG49 F100-1/2'' DN 50 HCP	DN 50 (2")	0.880 kg/pcs.	1 pcs.	113865
BG49 F100-1/2'' DN 65 HCP	DN 65 (2 1/2")	1.000 kg/pcs.	1 pcs.	113866
BG49 F100-1/2'' DN 80 HCP	DN 80 (3")	1.050 kg/pcs.	1 pcs.	113867
BG49 F100-1/2'' DN 100 HCP	DN 100 (4")	1.630 kg/pcs.	1 pcs.	113868

Dimensions

Type	B1	BP	DS	Lmax	Lmax horizontal
BG49 F100-1/2'' DN 15 HCP	81 mm	50 mm	30 mm	200 mm	150 mm
BG49 F100-1/2'' DN 20 HCP	87 mm	50 mm	30 mm	200 mm	150 mm
BG49 F100-1/2'' DN 25 HCP	93 mm	50 mm	30 mm	200 mm	150 mm
BG49 F100-1/2'' DN 32 HCP	102 mm	50 mm	30 mm	200 mm	150 mm
BG49 F100-1/2'' DN 40 HCP	108 mm	50 mm	30 mm	200 mm	150 mm
BG49 F100-1/2'' DN 50 HCP	120 mm	50 mm	30 mm	200 mm	150 mm
BG49 F100-1/2'' DN 65 HCP	136 mm	50 mm	30 mm	200 mm	150 mm
BG49 F100-1/2'' DN 80 HCP	149 mm	50 mm	30 mm	200 mm	150 mm
BG49 F100-1/2'' DN 100 HCP	195 mm	50 mm	40 mm	200 mm	150 mm

Certification