# Assembly Group BG16 F100-1/2'' HCP

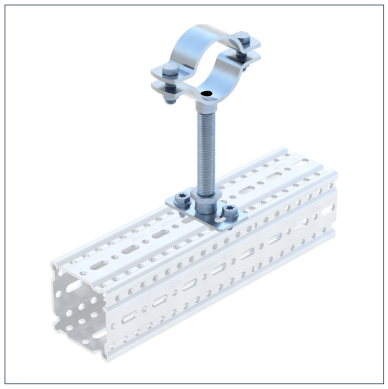

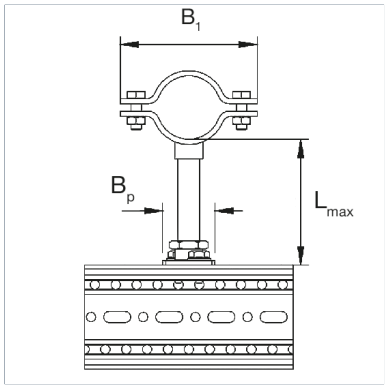


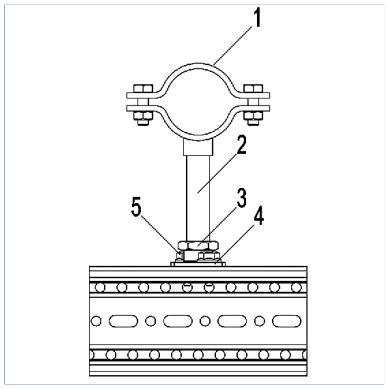


## General Information

An Assembly Group containing components to make up a permanent pipe connection with the heavy Pipe Clamp Stabil I-1/2'. The Assembly Group is designed for use with the Beam Section TP F 100. It is connected using the Self Forming Screw FLS F, and the height is adjusted via the Threaded Tube 1/2'.

## Installation

The assembly of the individual components to form an Assembly Group is carried out during the course of pipe installation on the construction site.

## Material Properties

| | |
|---|---|
| Halogen-free | 0 |
| UV-resistant | 0 |

## Material

| | |
|---|---|
| Primary element material | steel |
| Connecting element material | steel |
| Surface finish | HCP |
| Corrosion protection class | C4 |

## Types

| Type | Size min. | Size max. | DN | Weight | Quantity | Part number |
|---|---|---|---|---|---|---|
| BG16 F100-1/2'' DN 15 HCP | 16.00 mm | 22.00 mm | DN 15 (1/2") | 0.870 kg/ pcs. | 1 pcs. | 113842 |
| BG16 F100-1/2'' DN 20 HCP | 23.00 mm | 27.00 mm | DN 20 (3/4") | 0.880 kg/ pcs. | 1 pcs. | 113843 |
| BG16 F100-1/2'' DN 25 HCP | 30.00 mm | 34.00 mm | DN 25 (1") | 0.910 kg/ pcs. | 1 pcs. | 113844 |
| BG16 F100-1/2'' DN 32 HCP | 39.00 mm | 44.00 mm | DN 32 (1 1/4") | 0.950 kg/ pcs. | 1 pcs. | 113845 |
| BG16 F100-1/2'' DN 40 HCP | 44.00 mm | 49.00 mm | DN 40 (1 1/2") | 0.970 kg/ pcs. | 1 pcs. | 113846 |
| BG16 F100-1/2'' DN 50 HCP | 57.00 mm | 61.00 mm | DN 50 (2") | 1.190 kg/ pcs. | 1 pcs. | 113847 |
| BG16 F100-1/2'' DN 65 HCP | 73.00 mm | 77.00 mm | DN 65 (2 1/2") | 1.270 kg/ pcs. | 1 pcs. | 113848 |
| BG16 F100-1/2'' DN 80 HCP | 85.00 mm | 89.00 mm | DN 80 (3") | 1.330 kg/ pcs. | 1 pcs. | 113849 |
| BG16 F100-1/2'' DN 100 HCP | 109.00 mm | 116.00 mm | DN 100 (4") | 1.620 kg/ pcs. | 1 pcs. | 113850 |

# Assembly Group BG16 F100-1/2'' HCP

## Dimensions

| Type | B1 | BP | Lmax | Lmax horizontal |
|---|---|---|---|---|
| BG16 F100-1/2'' DN 15 HCP | 85 mm | 50 mm | 200 mm | 150 mm |
| BG16 F100-1/2'' DN 20 HCP | 92 mm | 50 mm | 200 mm | 150 mm |
| BG16 F100-1/2'' DN 25 HCP | 100 mm | 50 mm | 200 mm | 150 mm |
| BG16 F100-1/2'' DN 32 HCP | 112 mm | 50 mm | 200 mm | 150 mm |
| BG16 F100-1/2'' DN 40 HCP | 117 mm | 50 mm | 200 mm | 150 mm |
| BG16 F100-1/2'' DN 50 HCP | 139 mm | 50 mm | 200 mm | 150 mm |
| BG16 F100-1/2'' DN 65 HCP | 156 mm | 50 mm | 200 mm | 150 mm |
| BG16 F100-1/2'' DN 80 HCP | 168 mm | 50 mm | 200 mm | 150 mm |
| BG16 F100-1/2'' DN 100 HCP | 194 mm | 50 mm | 200 mm | 150 mm |

## Certification