Support Bracket WK 100-200



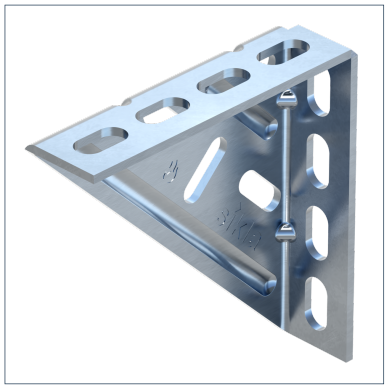



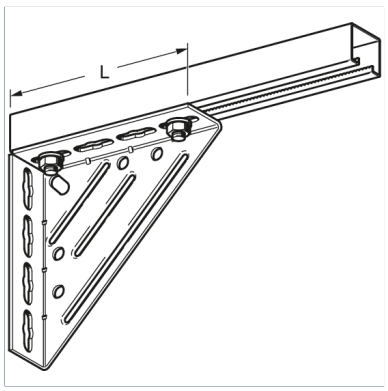

General Information

Sikla Support Brackets may be used for wall, floor and overhead pipe installation. Depending on the site, pipes may lie on the support bracket (U bolt), be arranged in vertical position or be suspended (grub screws). In combination with bolted-on channels, the support brackets offer a wide range of possibilities for cantilever arrangements. In addition, the load capacity of cross-bars can be increased by fixing them onto Support Brackets.

Mechanical Properties

Permissible stress σ{perm.}	160.00 N/mm²

Material Properties

Halogen-free	0
UV-resistant	0

Material

Primary element material	steel
Surface finish	electro galvanized (Fe//Zn)
Corrosion protection class	C2

Note on loadings

For load values, see additional documents.

Types

Type	Weight	Quantity	Part number
WK 100/100	0.169 kg/pcs.	25 pcs.	145626
WK 100/100-40	0.210 kg/pcs.	25 pcs.	163921
WK 150/150	0.590 kg/pcs.	25 pcs.	155513
WK 200/200	1.250 kg/pcs.	10 pcs.	118170

Dimensions

Type	B	b	d	H	H1	H2	H3	H4	L	L1	L2	L3	L4	t
WK 100/100	30 mm	11 mm	10 mm	100 mm	23.5 mm	53.5 mm	83.5 mm		100 mm	23.5 mm	53.5 mm	83.5 mm		2.5 mm
WK 100/100-40	40 mm	11 mm	10 mm	100 mm	23.5 mm	53.5 mm	83.5 mm		100 mm	23.5 mm	53.5 mm	83.5 mm		2.5 mm
WK 150/150	40 mm	13 mm	11 mm	150 mm	25.25 mm	59.75 mm	94.25 mm	128.75 mm	150 mm	25.25 mm	59.75 mm	94.25 mm	128.75 mm	4 mm
WK 200/200	60 mm	13 mm	17 mm	210 mm	31 mm	81 mm	131 mm	181 mm	210 mm	31 mm	81 mm	131 mm	181 mm	4 mm

Certification

Documents

Angle Bracket WK - Sikla Product Details (100-100, 150-150)

Angle Bracket WK - Sikla Product Details (200-200)