T-Bracket MOS MV 27

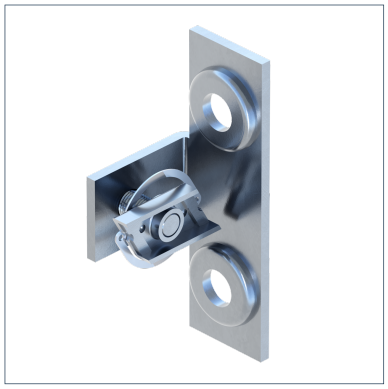

General Information

Used for installing crossbars between Channels MS 27 or building structures. Note: Each crossbar requires two T Brackets.

Installation

Per cross bar always two T-Brackets have to be used.

Material Properties

Halogen-free	0
UV-resistant	0

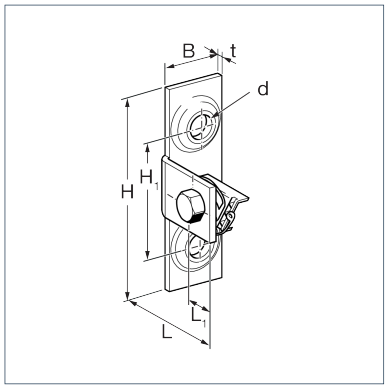

Material

Primary element material	steel
Surface finish	electro galvanized (Fe//Zn)
Corrosion protection class	C2

Types

Type	Weight	Quantity	Part number
MOS MV 27	0.084 kg/pcs.	10 pcs.	195871

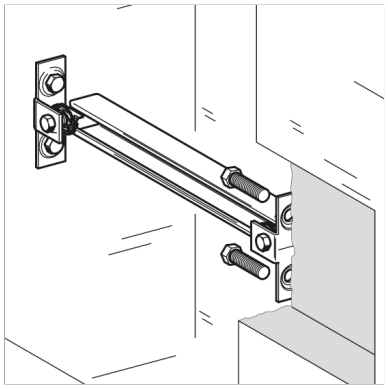

Dimensions

Type	B	d	H	H1	L	L1	t
MOS MV 27	26 mm	10.5 mm	88 mm	52 mm	35.5 mm	12.5 mm	3 mm

Certification