Corner Bracket EW 41-1 HCP

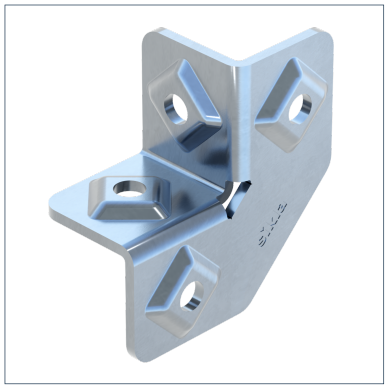

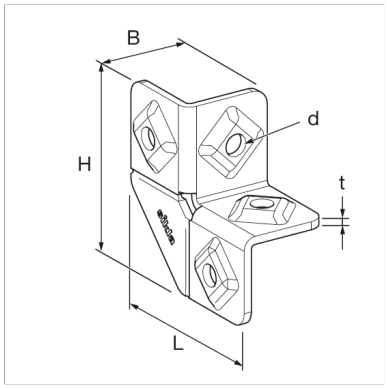

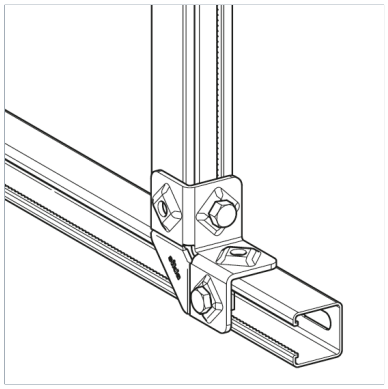

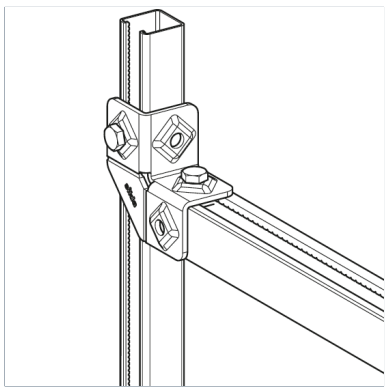

General Information

Connecting element for frame structures with channels of the 41 series. Depending on the application the direction of the channel opening can be freely choosen.

Installation

To be used in pairs.
Torque: 40 Nm

Material Properties

Halogen-free	0
UV-resistant	0

Material

Primary element material	steel
Surface finish	HCP
Corrosion protection class	C4

Forces

Type	-V{X,perm.}	V{X,perm.}	-V{Z,perm.}	V{Z,perm.}
EW 41-1 HCP	5.00 kN	5.00 kN	5.00 kN	5.00 kN

Note on loadings

Max. perm. Load as centre load per crossbar fixed with 2 Corner Brackets EW 41-1.

Types

Type	Weight	Quantity	Part number
EW 41-1 HCP	0.282 kg/pcs.	25 pcs.	117351

Dimensions

Type	B	d	H	L	t
EW 41-1 HCP	45 mm	11 mm	93 mm	93 mm	4 mm

Certification

Corner Bracket EW 41-1 HCP

