Tie Rod STR A4



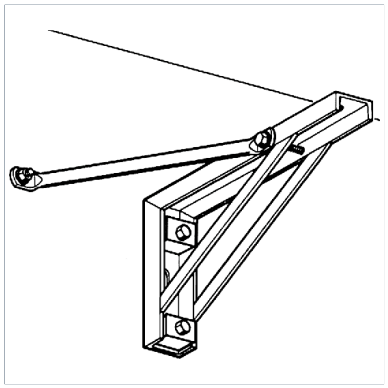

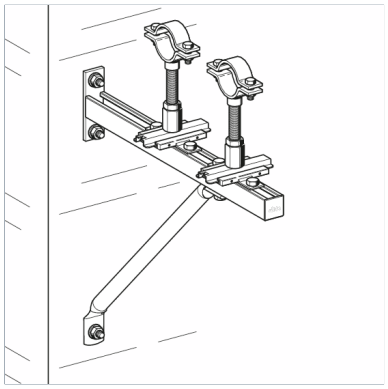

General Information

Necessary and time-saving element for horizontal or vertical constructions on the site. To be used as support and bracing of cantilever brackets or channel constructions.

Installation

Installation dimension A: 365
Pipe: 1/2"

Material Properties

Halogen-free	0
UV-resistant	0

Material

Primary element material	Stainless Steel A4
Corrosion protection class	CRC II – III (C4 – C5 acc. to DIN EN ISO 12944-2)

Forces

Type	-V{Z,perm.}	V{Z,perm.}
STR 550/350 A4	7.00 kN	7.00 kN

Types

Type	Weight	Quantity	Part number
STR 550/350 A4	0.521 kg/pcs.	10 pcs.	171920

Dimensions

Type	D	d	H	H1	W
STR 550/350 A4	21.3 mm	11.5 mm	377 mm	365 mm	45°

Certification