Holding Bracket HK 41 A4

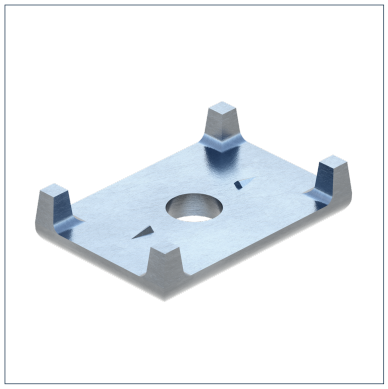

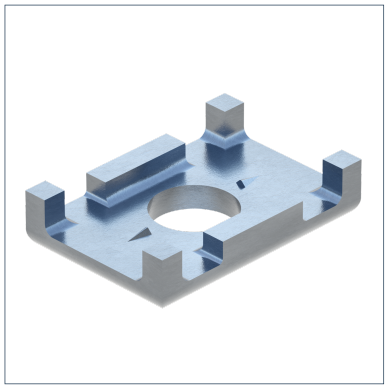

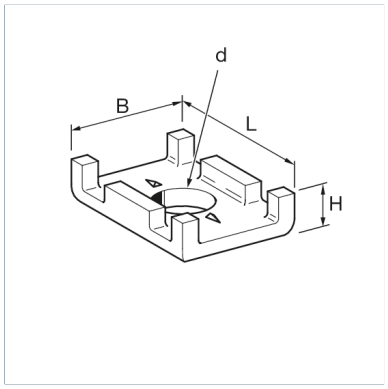

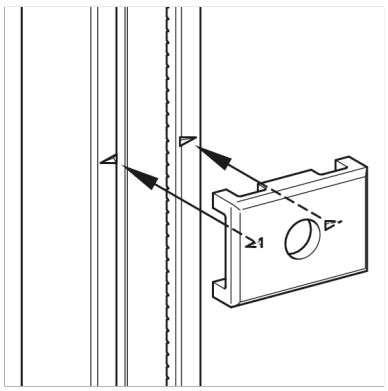

General Information

Safety element for Sikla Channels to be used instead of simple washers. The Holding Bracket prevents the edges along the opening of the channels from bending, and ensures optimum load distribution. Suitable for single and double channels. When loads are imposed along the channels, Holding Brackets 41 provide for additional safety due to embossed teeth, which penetrate the channel.

Installation

Suitable for Sikla channels of 41 mm width.

Material Properties

Halogen-free	0
UV-resistant	0

Material

Primary element material	Stainless Steel A4
Corrosion protection class	CRC II – III (C4 – C5 acc. to DIN EN ISO 12944-2)

Types

Type	Weight	Quantity	Part number
HK 41/10 A4	0.070 kg/pcs.	50 pcs.	178634
HK 41/12 A4	0.076 kg/pcs.	50 pcs.	178643
HK 41/16 A4	0.070 kg/pcs.	50 pcs.	178652

Dimensions

Type	B	d	H	L
HK 41/10 A4	41 mm	11 mm	12 mm	35 mm
HK 41/12 A4	41 mm	13 mm	12 mm	35 mm
HK 41/16 A4	41 mm	17 mm	12 mm	35 mm

Certification

EDELSTAHL Rostfrei®

epd-global
Powered by EPD-Norway

Holding Bracket HK 41 A4

