# Holding Bracket HK 41

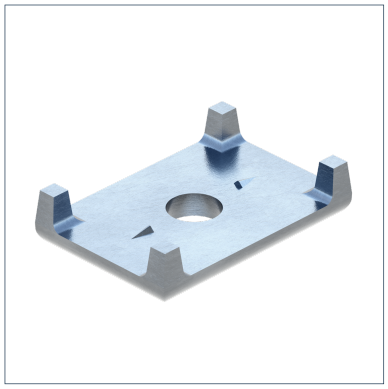

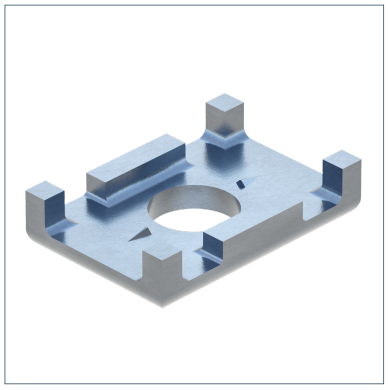

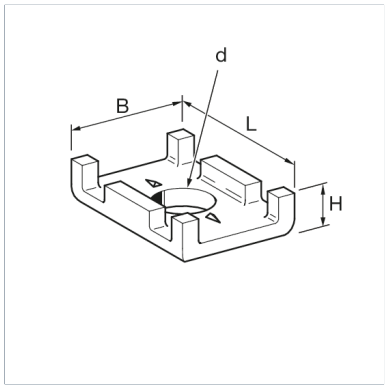


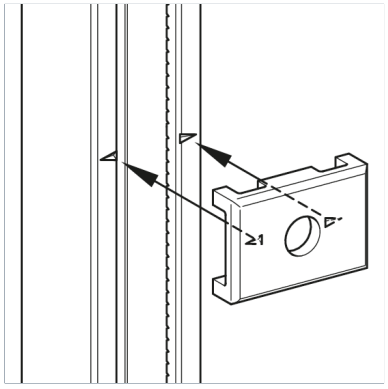


## General Information

Safety element for Sikla Channels to be used instead of simple washers. The Holding Bracket prevents the edges along the opening of the channels from bending, and ensures optimum load distribution. When loads are imposing along the channels, 41 Holding Brackets provide for additional safety due to embossed teeth, which penetrate the channel. Suitable for single and double channels. Special blanking guarantees high security and shear force after achieving form closure, especially for screwed through connecting elements.

## Installation

Suitable for Sikla channels of 41 mm width.

## Material Properties

| | |
|---|---|
| Halogen-free | 0 |
| UV-resistant | 0 |

## Material

| | |
|---|---|
| Primary element material | cast steel |
| Surface finish | electro galvanized (Fe//Zn) |
| Corrosion protection class | C2 |

## Types

| Type | Weight | Quantity | Part number |
|---|---|---|---|
| HK 41/10 | 0.062 kg/pcs. | 50 pcs. | 178247 |
| HK 41/12 | 0.071 kg/pcs. | 50 pcs. | 178256 |
| HK 41/16 | 0.068 kg/pcs. | 50 pcs. | 178265 |

## Dimensions

| Type | B | d | H | L |
|---|---|---|---|---|
| HK 41/10 | 41 mm | 11 mm | 12 mm | 35 mm |
| HK 41/12 | 41 mm | 13 mm | 12 mm | 35 mm |
| HK 41/16 | 41 mm | 17 mm | 12 mm | 35 mm |

## Certification

epd-global
Powered by EPD-Norway

# Holding Bracket HK 41

